CONFIDENTIAL
This document is the property of Evapco, Inc. It should not be copied or disclosed without prior written authorization.

EVAPCO, INC.

CUSTOMER	MODEL #	SCALE	DWG. #	REV.	DATE
	SSTXB3-2144H0075A1MA	N.T.S.	STXC3-SE-12	1	5/15/2026

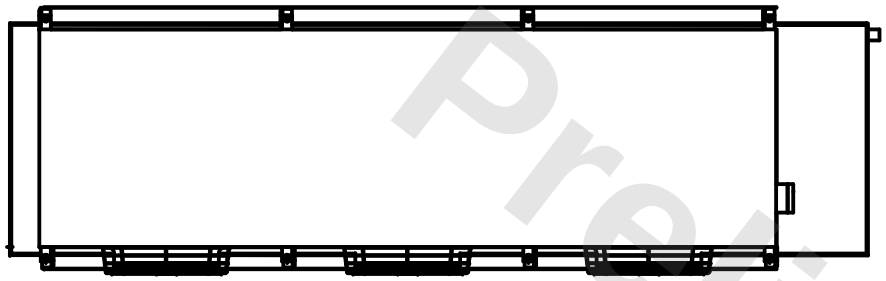

NOTES:

1) * = HANGER HOLE LOCATION.
2) RIGHT HAND MODEL SHOWN.
3) HANGER HOLES ARE FOR 3/4 INCH THREADED ROD.
4) WATER DEFROST ADDS 6 1/2" INCHES TO HEIGHT AND 5" INCHES TO WIDTH OF STANDARD UNIT AND CHANGES THE DRAIN SIZE.
5) ALL DIMENSIONS ARE FOR REFERENCE AND SHOULD NOT BE USED FOR PREFABRICATION OF PIPING OR SUPPORTS.

Preliminary

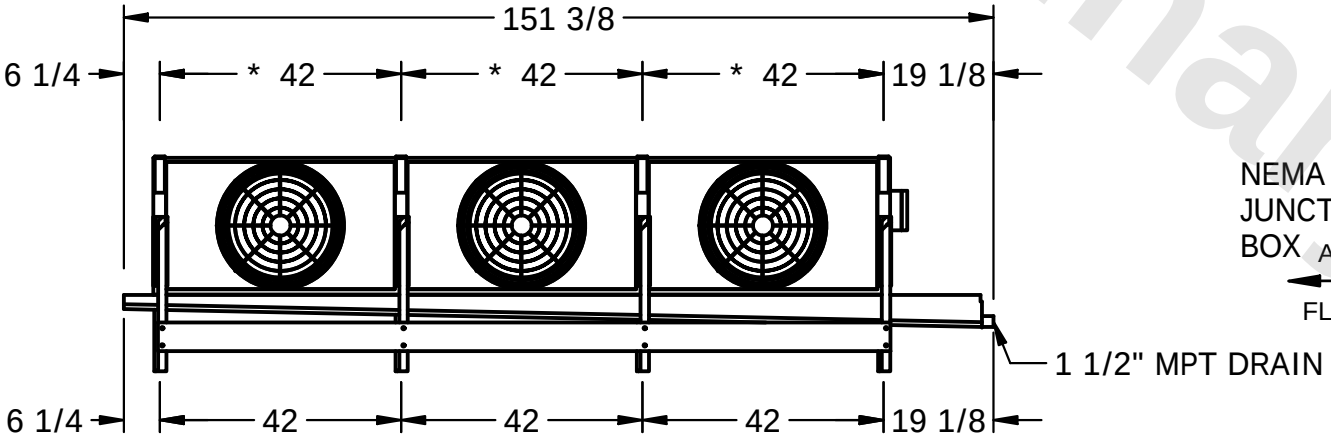

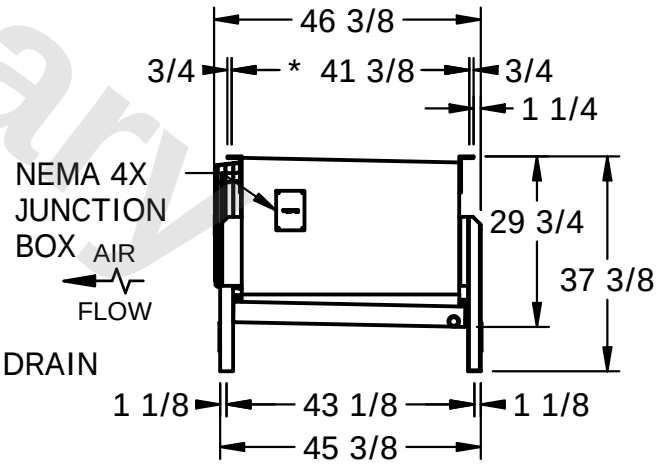

PROJECT	ROOM	SHIPPING WEIGHT	OPERATING WEIGHT
		1160 lbs	1260 lbs