CONFIDENTIAL
This document is the property of Evapco, Inc. It should not be copied or disclosed without prior written authorization.

# EVAPCO, INC.

| CUSTOMER | MODEL # | SCALE | DWG. # | REV. | DATE |
|---|---|---|---|---|---|
| | SSTHB1-25103H0750K1MA | N.T.S. | STL1-SE-18-10R-FL | 1 | 8/4/2025 |

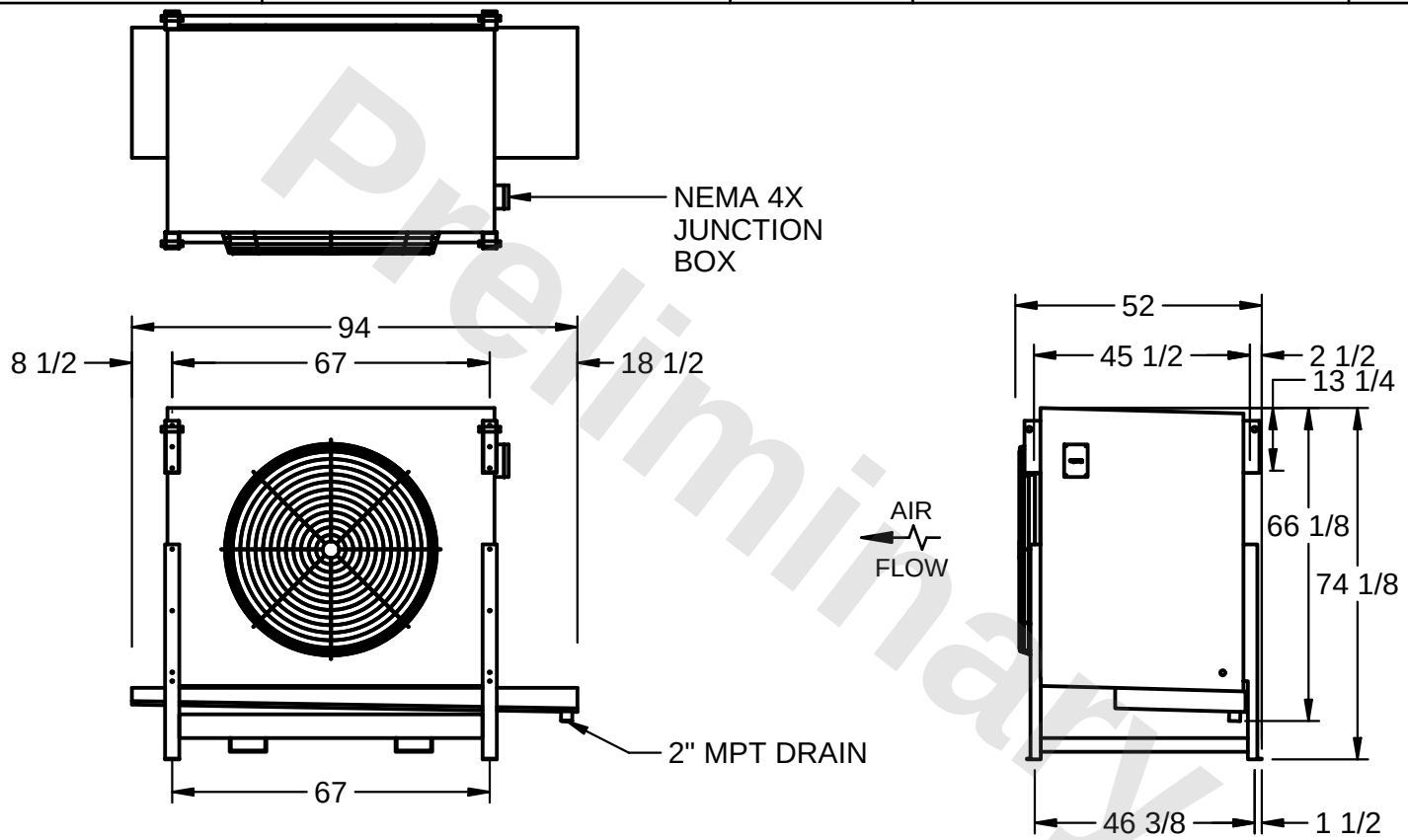


Preliminary

NOTES:

1) RIGHT HAND MODEL SHOWN.

2) ALL DIMENSIONS ARE FOR REFERENCE AND SHOULD NOT BE USED FOR PREFABRICATION OF PIPING OR SUPPORTS.

3) WATER DEFROST ADDS 6 INCHES TO HEIGHT OF STANDARD UNIT AND CHANGES DRAIN SIZE.

4) HANGER HOLES ARE FOR 3/4 INCH THREADED ROD.

| PROJECT | ROOM | SHIPPING WEIGHT | OPERATING WEIGHT |
|---|---|---|---|
| | | 1810 lbs | 2060 lbs |