UNIT	MODEL #	SCALE	EVAPCO, INC.	DWG. #	REV
COOLING TOWER	AT 17-2K14	NTS		CT4C071424-DRA-ST	-
				SERIAL #	DATE: 7/20/2025

NOTES:
1. (M)- FAN MOTOR LOCATION
2. HEAVIEST SECTION IS FAN/CASING SECTION
3. MPT DENOTES MALE PIPE THREAD
   FPT DENOTES FEMALE PIPE THREAD
   BFW DENOTES BEVELED FOR WELDING
   GVD DENOTES GROOVED
   FLG DENOTES FLANGE
4. +UNIT WEIGHT DOES NOT INCLUDE ACCESSORIES (SEE ACCESSORY DRAWINGS)
5. 3/4" [19MM] DIA. MOUNTING HOLES. REFER TO RECOMMENDED STEEL SUPPORT DRAWING
6. DIMENSIONS LISTED AS FOLLOWS:
   ENGLISH FT-IN
   [METRIC] [mm]
7. MAKE-UP WATER PRESSURE
   20 psi MIN [137 kPa], 50 psi MAX [344 kPa]

FACE C

FACE B
PLAN VIEW

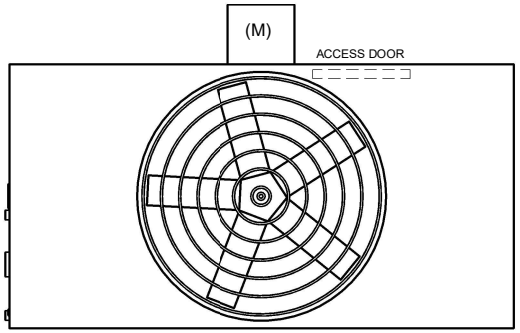

FACE D

FACE A

Preliminary

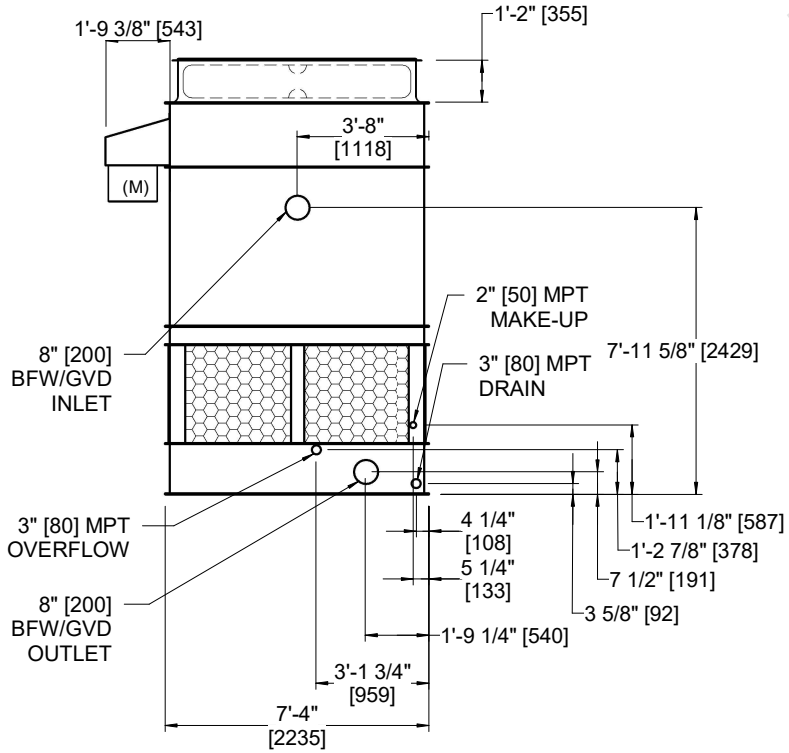

FACE B

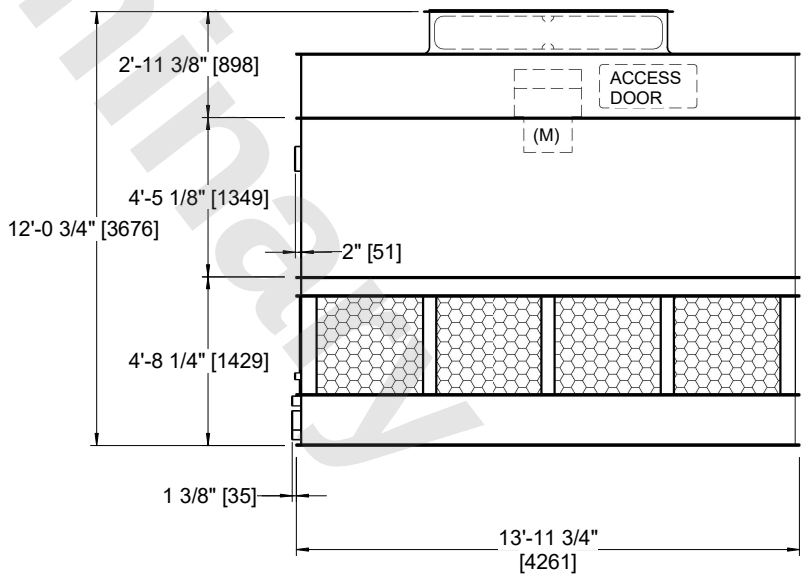

FACE A

SHIPPING WEIGHT	OPERATING WEIGHT	HEAVIEST SECTION WEIGHT	NO. OF SHIPPING SECTIONS	DRAWN BY:
5430 lbs+ [2465] kg+	9360 lbs+ [4250] kg+	3530 lbs+ [1605] kg+	2	JLG