UNIT	COOLING TOWER		EVAPCO, INC.	DWG. #	CT4C070936-DRA-ST	REV.	-
MODEL #	AT 17-3K9	SCALE NTS		SERIAL #		DATE	3/29/2026

NOTES:
1. (M)- FAN MOTOR LOCATION
2. HEAVIEST SECTION IS FAN/CASING SECTION
3. MPT DENOTES MALE PIPE THREAD
   FPT DENOTES FEMALE PIPE THREAD
   BFW DENOTES BEVELED FOR WELDING
   GVD DENOTES GROOVED
   FLG DENOTES FLANGE
4. +UNIT WEIGHT DOES NOT INCLUDE
   ACCESSORIES (SEE ACCESSORY DRAWINGS)
5. 3/4" [19MM] DIA. MOUNTING HOLES.
   REFER TO RECOMMENDED STEEL
   SUPPORT DRAWING
6. DIMENSIONS LISTED AS FOLLOWS:
   ENGLISH FT-IN
   [METRIC] [mm]
7. MAKE-UP WATER PRESSURE
   20 psi MIN [137 kPa], 50 psi MAX [344 kPa]

Preliminary

FACE C

FACE B

PLAN VIEW

FACE D

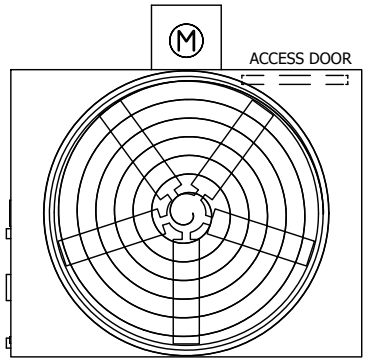

FACE A

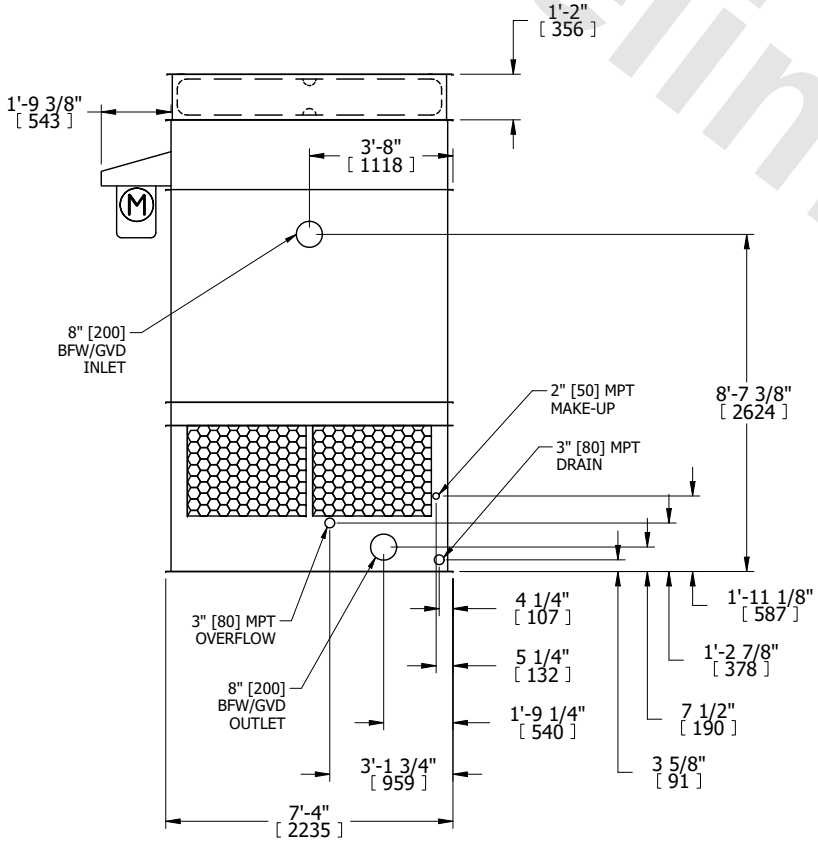

FACE B

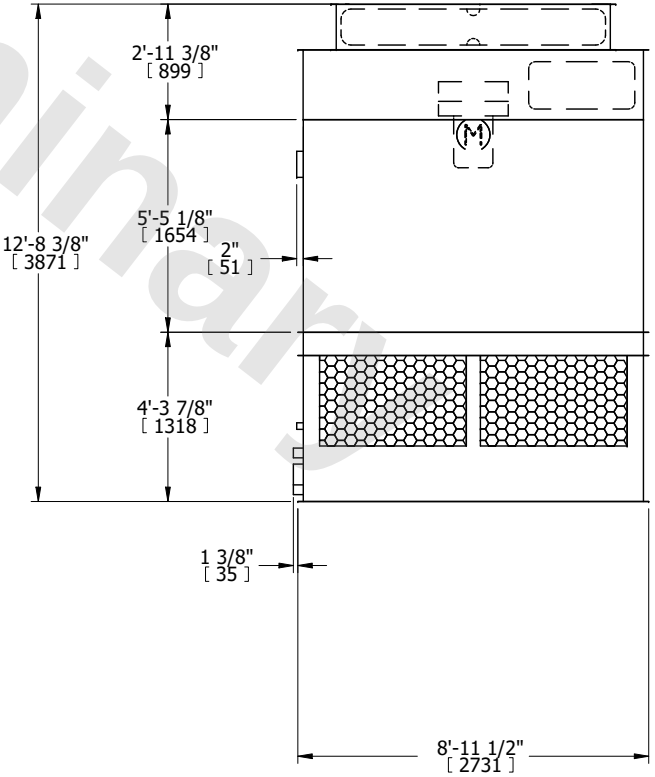

FACE A

SHIPPING WEIGHT	4370 lbs+ [1985] kg+	OPERATING WEIGHT	6880 lbs+ [3125] kg+	HEAVIEST SECTION WEIGHT	3010 lbs+ [1370] kg+	NO. OF SHIPPING SECTIONS	2	DRAWN BY:	MBG