UNIT	COOLING TOWER		EVAPCO, INC.	DWG. #	CT4C140924-DRA-ST	REV.	-
MODEL #	AT 214-2J9	SCALE NTS		SERIAL #		DATE	5/5/2026

NOTES:
1. (M)- FAN MOTOR LOCATION
2. HEAVIEST SECTION IS FAN/CASING SECTION
3. MPT DENOTES MALE PIPE THREAD
   FPT DENOTES FEMALE PIPE THREAD
   BFW DENOTES BEVELED FOR WELDING
   GVD DENOTES GROOVED
   FLG DENOTES FLANGE
4. +UNIT WEIGHT DOES NOT INCLUDE ACCESSORIES (SEE ACCESSORY DRAWINGS)
5. 3/4" [19MM] DIA. MOUNTING HOLES. REFER TO RECOMMENDED STEEL SUPPORT DRAWING
6. DIMENSIONS LISTED AS FOLLOWS:
   ENGLISH FT-IN
   [METRIC] [mm]
7. MAKE-UP WATER PRESSURE 20 psi MIN [137 kPa], 50 psi MAX [344 kPa]

Preliminary

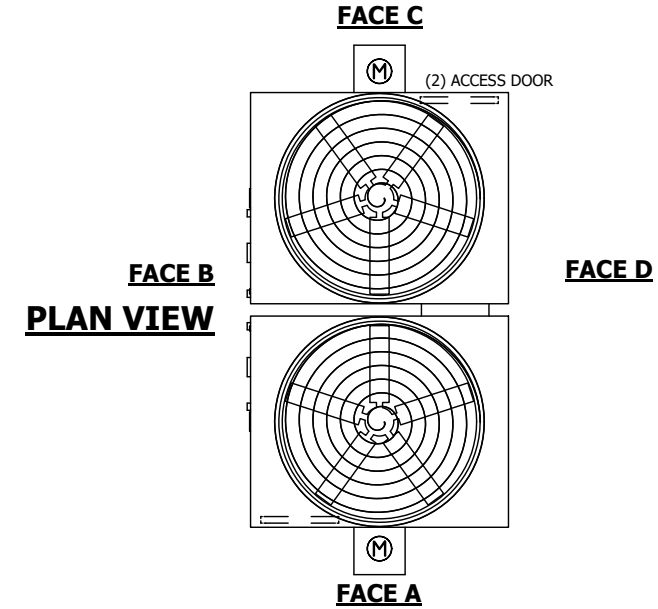

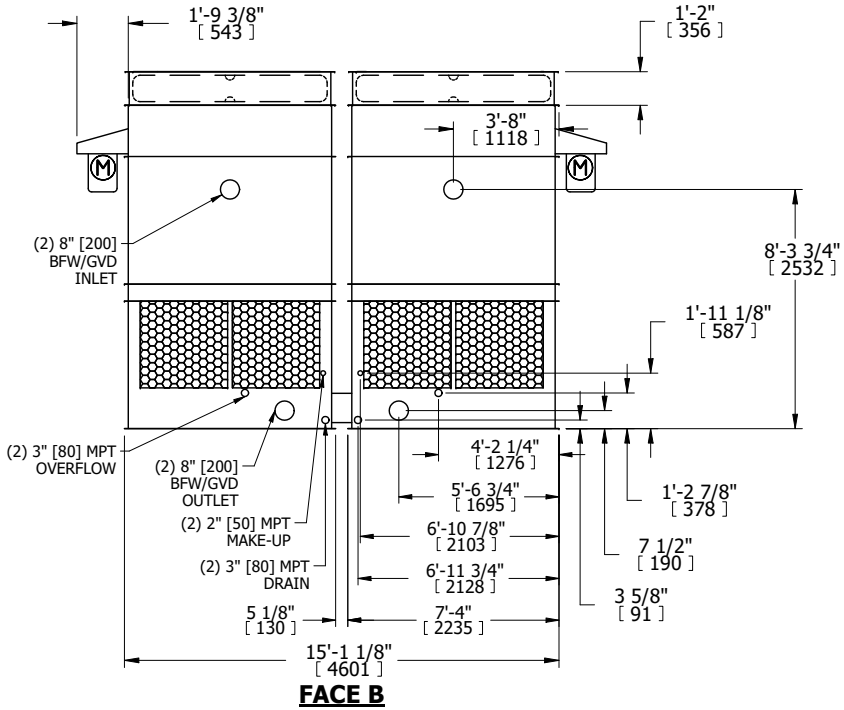

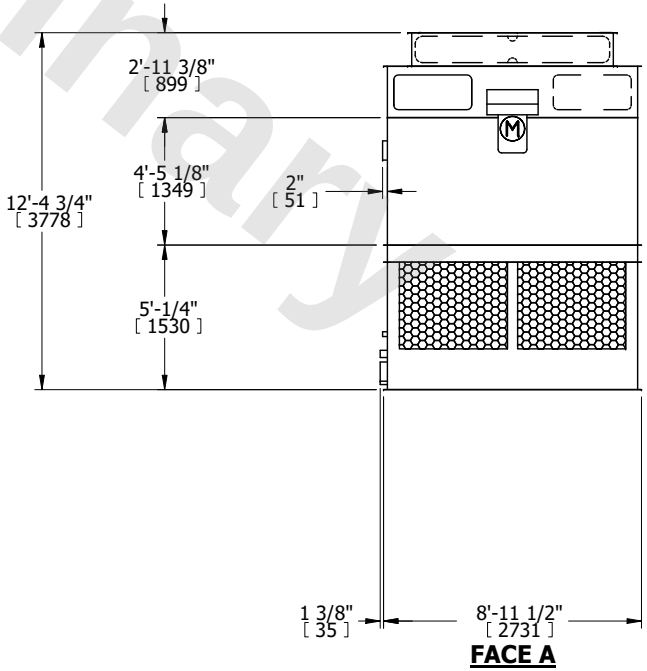

SHIPPING WEIGHT	8260 lbs+ [3750] kg+	OPERATING WEIGHT	11980 lbs+ [5435] kg+	HEAVIEST SECTION WEIGHT	2700 lbs+ [1225] kg+	NO. OF SHIPPING SECTIONS	4	DRAWN BY:	MBG