| UNIT | CONDENSER | | | DWG. # | C4242412-DRA-ST | REV | - |
|---|---|---|---|---|---|---|---|
| MODEL # | ATC-2273E | SCALE | NTS | SERIAL # | | DATE: | 7/5/2026 |

# EVAPCO, INC.

NOTES
1. (M)- FAN MOTOR LOCATION
2. MPT DENOTES MALE PIPE THREAD
   FPT DENOTES FEMALE PIPE THREAD
   BFW DENOTES BEVELED FOR WELDING
   GVD DENOTES GROOVED
   FLG DENOTES FLANGE
   PE DENOTES PLAIN END
3. +UNIT WEIGHT DOES NOT INCLUDE ACCESSORIES (SEE ACCESSORY DRAWINGS)
4. MAKE-UP WATER PRESSURE 20 psi MIN [137 kPa], 50 psi MAX [344 kPa]
5. *-APPROXIMATE DIMENSIONS DO NOT USE FOR PRE-FABRICATION OF CONNECTING PIPING
6. 3/4" [19mm] DIA. MOUNTING HOLES. REFER TO RECOMMENDED STEEL SUPPORT DRAWING.
7. DIMENSIONS LISTED AS FOLLOWS:
   ENGLISH FT-IN
   METRIC [mm]

Preliminary

**FACE C**

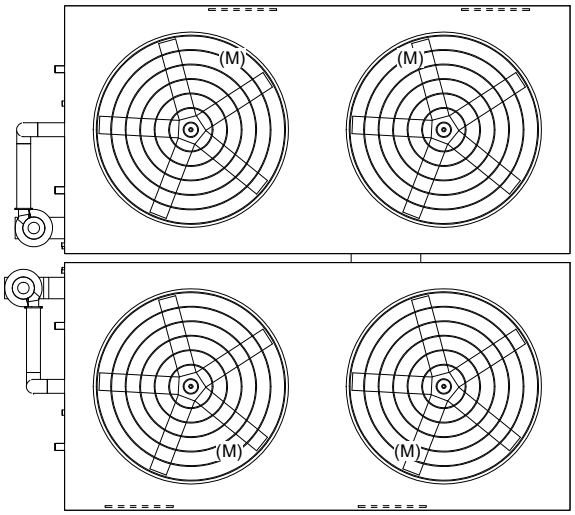


**FACE B**
**PLAN VIEW**

**FACE D**

**FACE A**

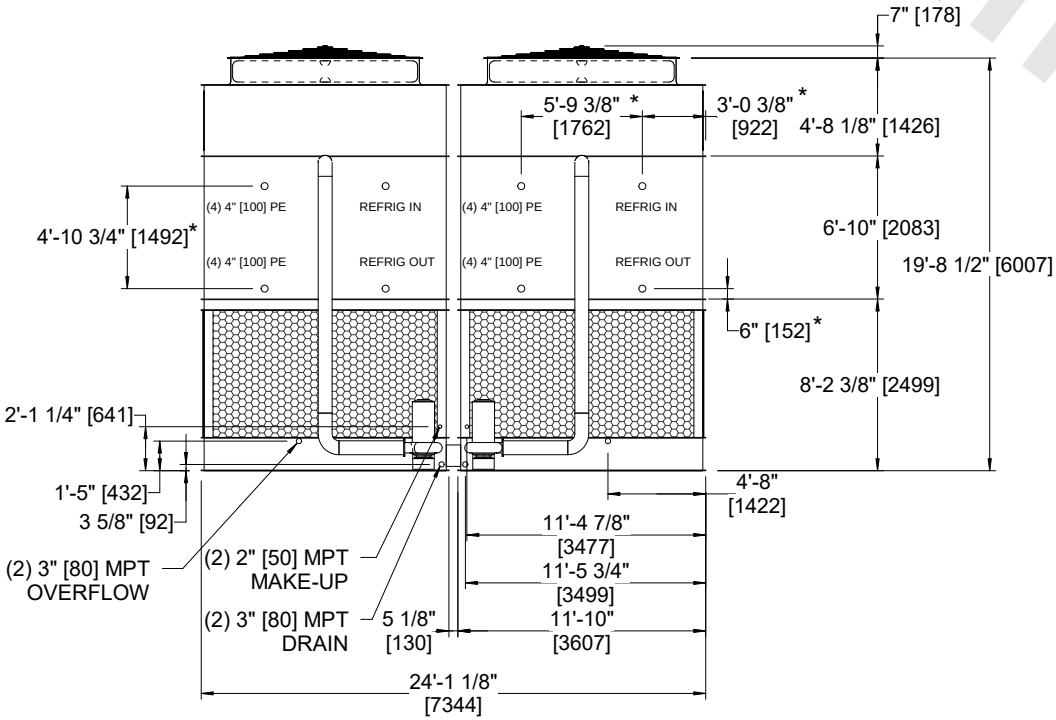


**FACE B**

(4) ACCESS DOOR

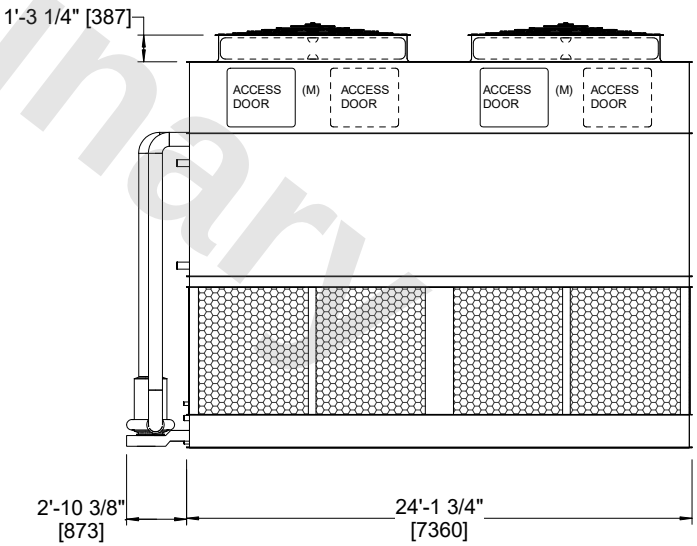


**FACE A**

| SHIPPING WEIGHT | 87820 lbs+ [39835] kg+ | OPERATING WEIGHT | 114300 lbs+ [51850] kg+ | HEAVIEST SECTION WEIGHT | 37090 lbs+ [16825] kg+ | NO. OF SHIPPING SECTIONS | 4 | DRAWN BY: | JLG |
|---|---|---|---|---|---|---|---|---|---|