UNIT	COOLING TOWER			DWG. #	T4283624-DRA-ST	REV	-
MODEL #	AT 428-2K36	SCALE	NTS	SERIAL #		DATE:	3/23/2026

EVAPCO, INC.

NOTES:
1. (M)- FAN MOTOR LOCATION
2. HEAVIEST SECTION IS FAN/CASING SECTION
3. MPT DENOTES MALE PIPE THREAD
   FPT DENOTES FEMALE PIPE THREAD
   BFW DENOTES BEVELED FOR WELDING
   GVD DENOTES GROOVED
   FLG DENOTES FLANGE
4. +UNIT WEIGHT DOES NOT INCLUDE ACCESSORIES (SEE ACCESSORY DRAWINGS)
5. 3/4" [19MM] DIA. MOUNTING HOLES. REFER TO RECOMMENDED STEEL SUPPORT DRAWING
6. DIMENSIONS LISTED AS FOLLOWS:
   ENGLISH FT-IN
   [METRIC] [mm]
7. MAKE-UP WATER PRESSURE 20 psi MIN [137 kPa], 50 psi MAX [344 kPa]
8. PAN FLUME BOX EQUALIZERS SUPPLIED BY EVAPCO PAN EQUALIZER PIPING IS SUPPLIED BY OTHERS.
9. PAN EQUALIZER NIPPLE IS 11'-10 3/8" [3616] OFF EACH STEP SIDE.

Preliminary

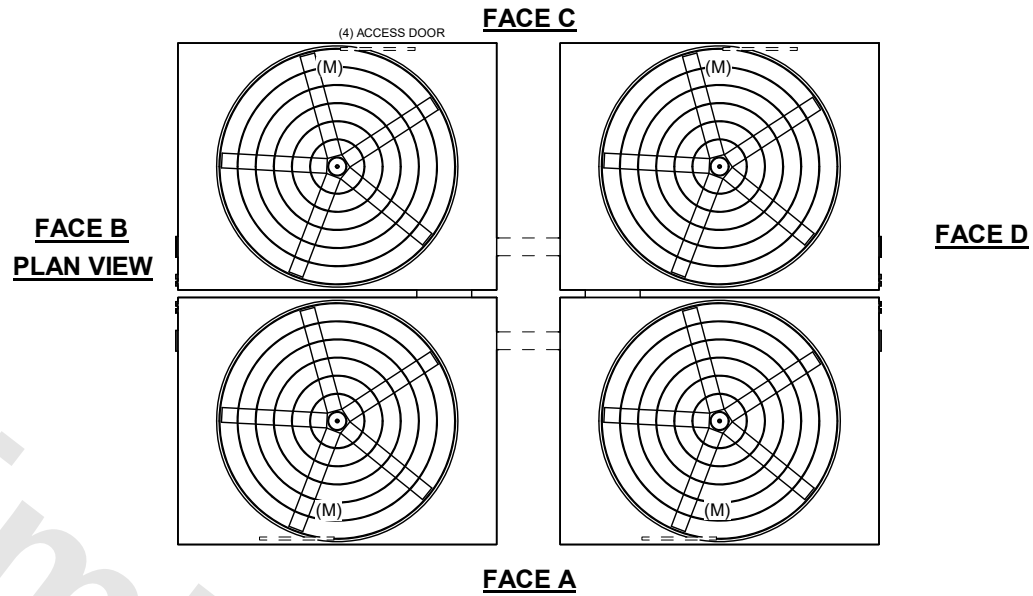

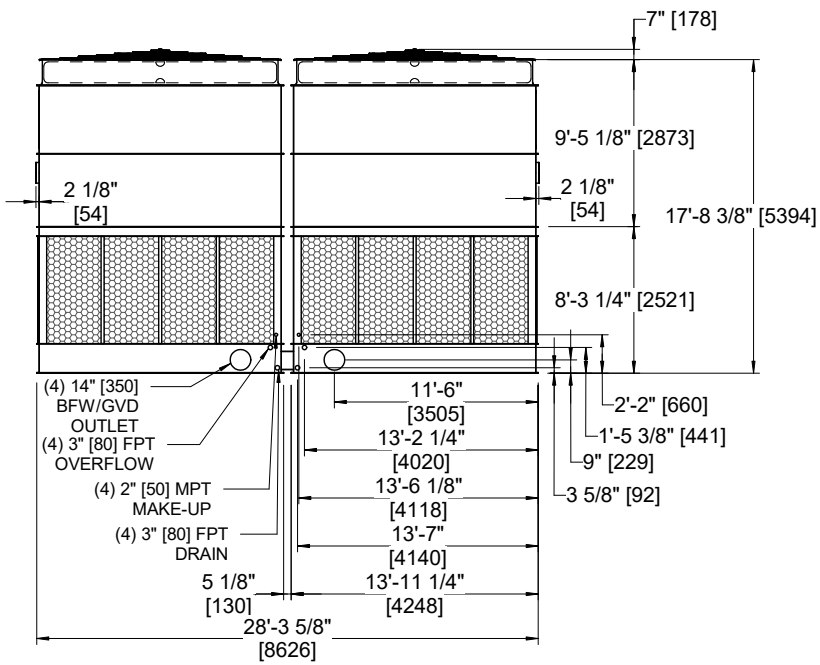

FACE B

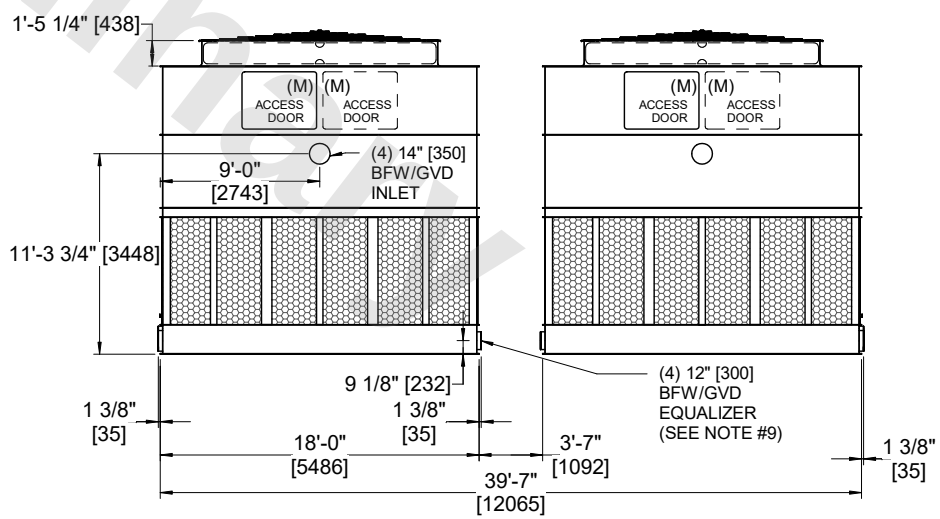

FACE A

SHIPPING WEIGHT	61840 lbs+ [28055] kg+	OPERATING WEIGHT	100680 lbs+ [45670] kg+	HEAVIEST SECTION WEIGHT	10370 lbs+ [4705] kg+	NO. OF SHIPPING SECTIONS	8	DRAWN BY:	TRS