UNIT	COOLING TOWER			DWG. #	T4281848-DRA-ST	REV	-
MODEL #	AT 228-4K18	SCALE	NTS	SERIAL #		DATE:	7/8/2026

EVAPCO, INC.

NOTES:
1. (M)- FAN MOTOR LOCATION
2. HEAVIEST SECTION IS FAN/CASING SECTION
3. MPT DENOTES MALE PIPE THREAD
   FPT DENOTES FEMALE PIPE THREAD
   BFW DENOTES BEVELED FOR WELDING
   GVD DENOTES GROOVED
   FLG DENOTES FLANGE
4. +UNIT WEIGHT DOES NOT INCLUDE ACCESSORIES (SEE ACCESSORY DRAWINGS)
5. 3/4" [19MM] DIA. MOUNTING HOLES. REFER TO RECOMMENDED STEEL SUPPORT DRAWING
6. DIMENSIONS LISTED AS FOLLOWS:
   ENGLISH FT-IN
   [METRIC] [mm]
7. MAKE-UP WATER PRESSURE 20 psi MIN [137 kPa], 50 psi MAX [344 kPa]

Preliminary

FACE C

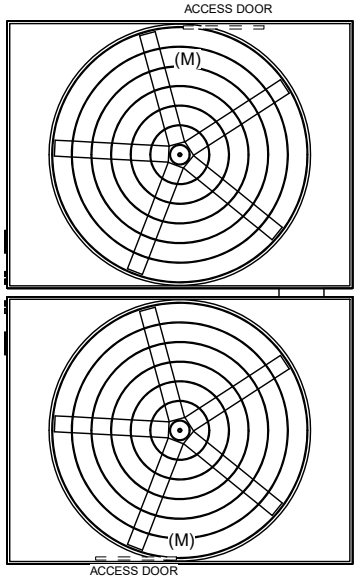

FACE B

PLAN VIEW

FACE D

FACE A

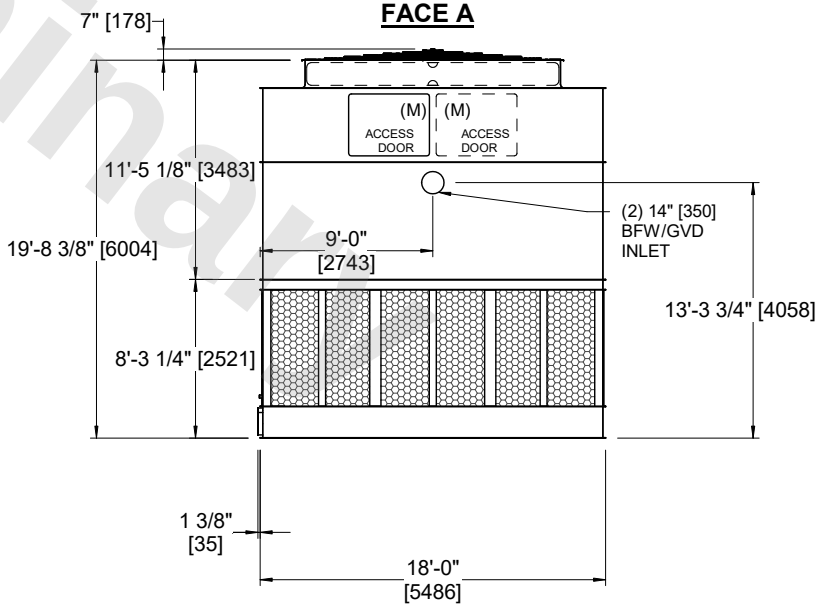

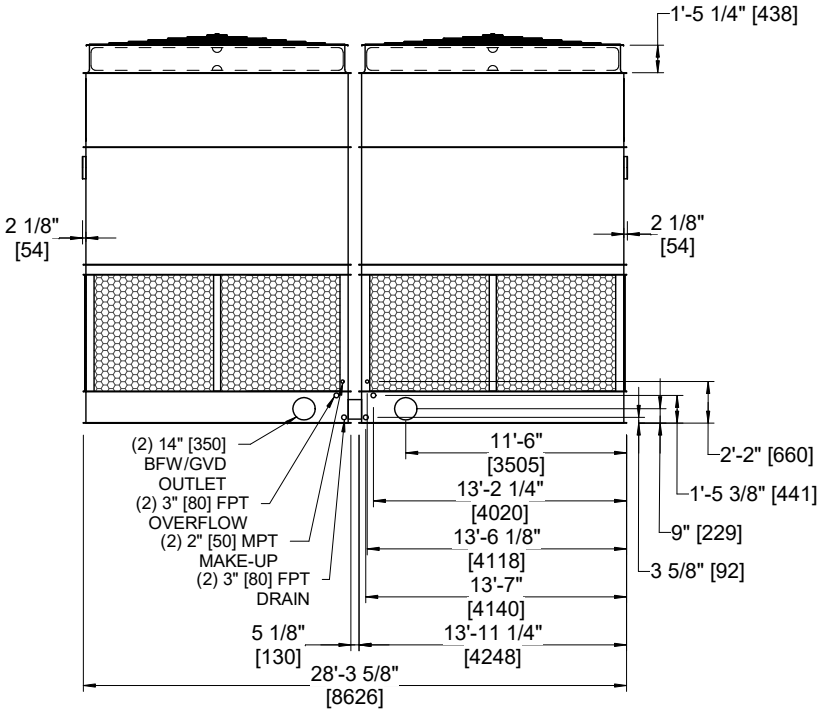

FACE B

FACE A

SHIPPING WEIGHT	34440 lbs+ [15625] kg+	OPERATING WEIGHT	53860 lbs+ [24435] kg+	HEAVIEST SECTION WEIGHT	12150 lbs+ [5515] kg+	NO. OF SHIPPING SECTIONS	2	DRAWN BY:	TRS