UNIT	COOLING TOWER			DWG. #	ATL4BI48304E5T-DRD-DS	REV	-
MODEL #	AT 248-5P30-EV	SCALE	NTS	SERIAL #		DATE:	10/18/2025

EVAPCO, INC.

NOTES
1. (M)- FAN MOTOR LOCATION
2. HEAVIEST SECTION IS CASING SECTION
3. MPT DENOTES MALE PIPE THREAD
   FPT DENOTES FEMALE PIPE THREAD
   BFW DENOTES BEVELED FOR WELDING
   GVD DENOTES GROOVED
   FLG DENOTES FLANGE
4. +UNIT WEIGHT DOES NOT INCLUDE ACCESSORIES (SEE ACCESSORY DRAWINGS)
5. 3/4" [19mm] DIA. MOUNTING HOLES. REFER TO RECOMMENDED STEEL SUPPORT DRAWING
6. DIMENSIONS LISTED AS FOLLOWS
   ENGLISH FT-IN
   [METRIC] [mm]
7. FOR BOTTOM INLET SPECIFICATIONS, SEE DETAIL.

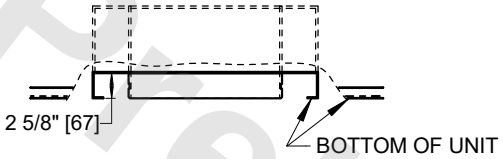

TYPICAL BOTTOM INLET CONNECTION DETAIL

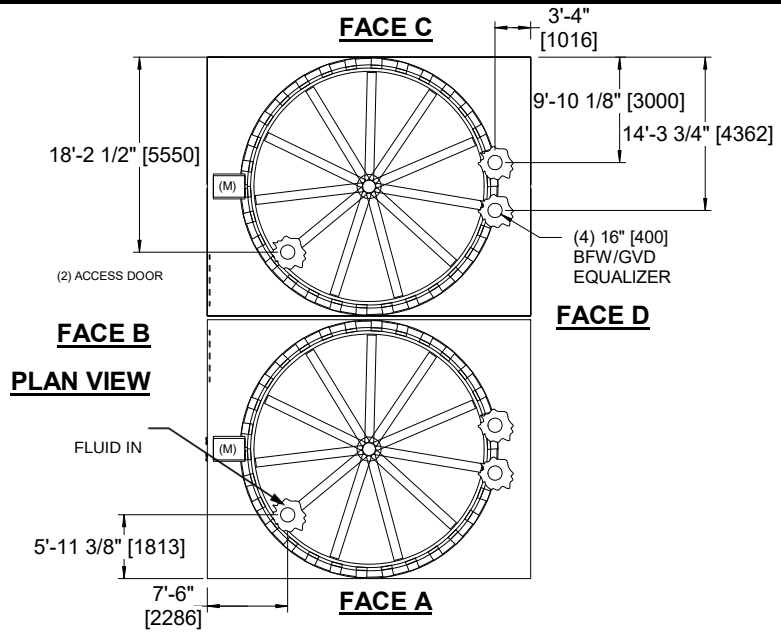

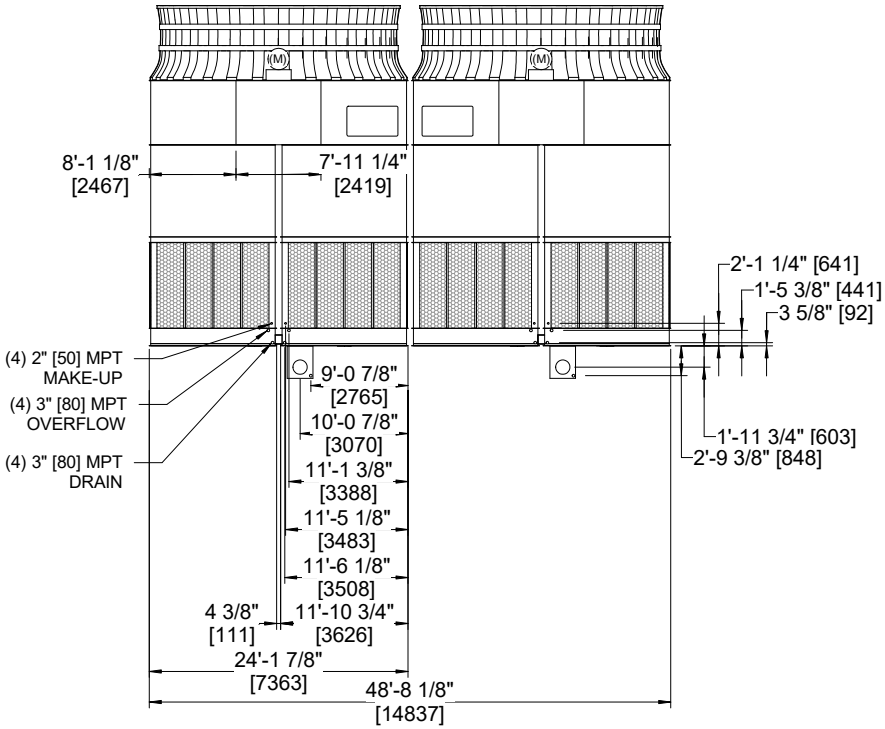

FACE B

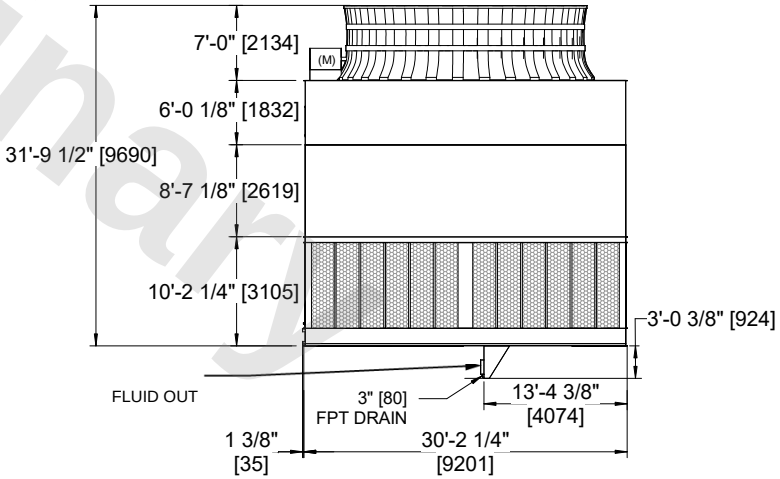

FACE A

Preliminary

SHIPPING WEIGHT	139300 lbs+ [63190] kg+	OPERATING WEIGHT	192360 lbs+ [87255] kg+	HEAVIEST SECTION WEIGHT	13200 lbs+ [5990] kg+	NO. OF SHIPPING SECTIONS	14	DRAWN BY:	JLG