CONFIDENTIAL
This document is the property of Evapco, Inc. It should not be copied or disclosed without prior written authorization.

CUSTOMER	MODEL #	SCALE	DWG. #	REV.	DATE
	U-SSTWE2-19R64F0100F1KA	N.T.S.	USSTW2-SE-6L	0	5/16/2026

AIR FLOW DIAGRAM

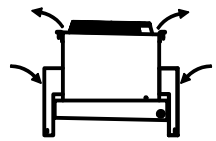

NOTES:
1) * = HANGER HOLE LOCATION.
2) HANGER HOLES ARE FOR 3/4 INCH THREADED ROD.
3) ALL DIMENSIONS ARE FOR REFERENCE AND SHOULD NOT BE USED FOR PREFABRICATION OF PIPING OR SUPPORTS.

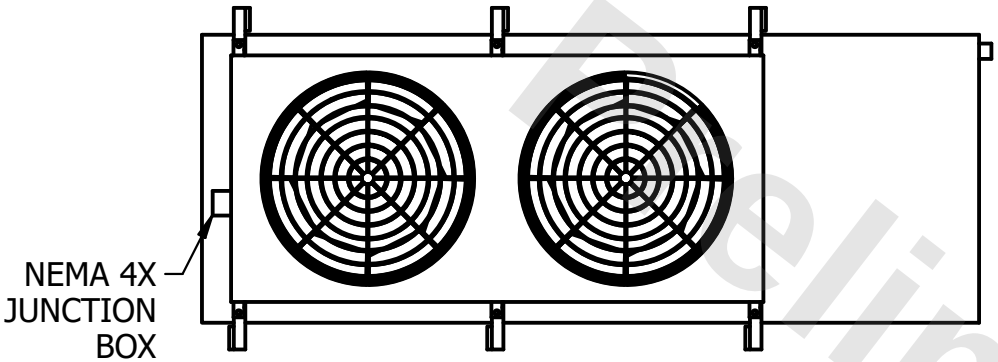

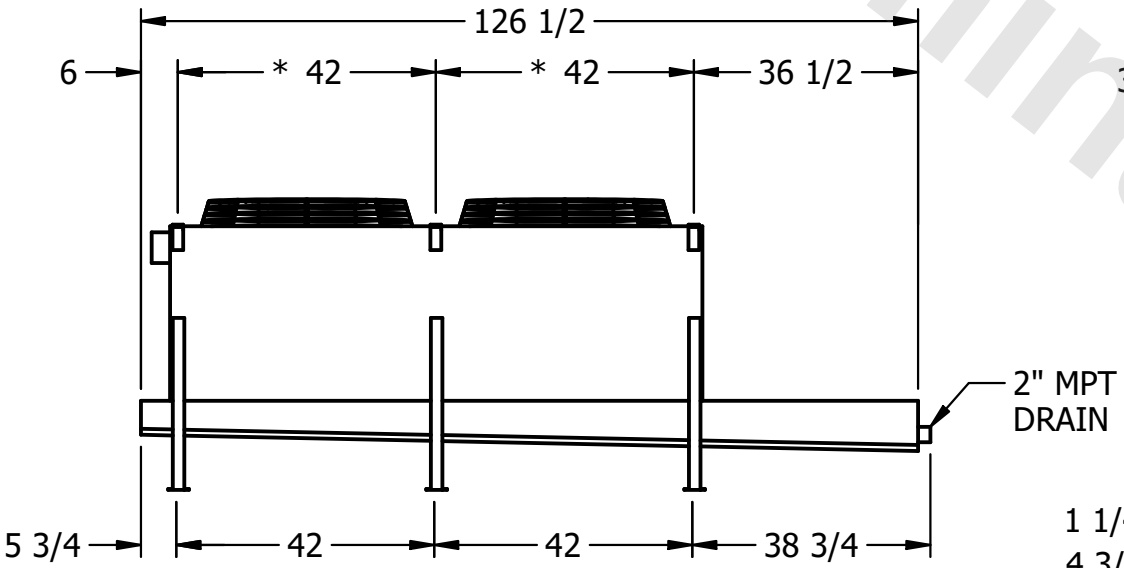

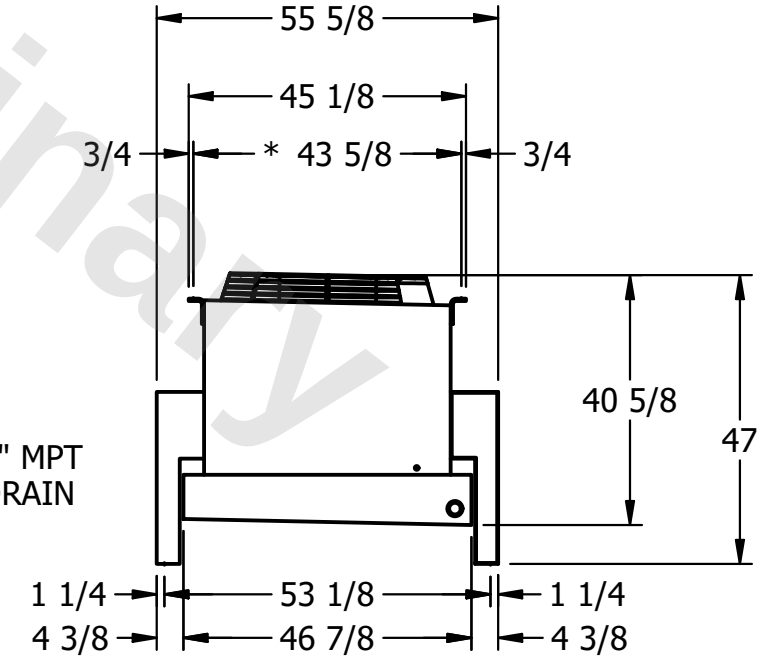

Preliminary

PROJECT	ROOM	SHIPPING WEIGHT	OPERATING WEIGHT
		1010 lbs+ [460] kg+	1140 lbs+ [520] kg+