CONFIDENTIAL
This document is the property of Evapco, Inc. It should not be copied or disclosed without prior written authorization.

| CUSTOMER | MODEL # | SCALE | DWG. # | REV. | DATE |
|---|---|---|---|---|---|
| | U-SSTME3-3286F0100F1KA | N.T.S. | USSTM3-SE-16,18 | 0 | 11/22/2025 |

NOTES:
1) * = HANGER HOLE LOCATION.
2) RIGHT HAND MODEL SHOWN.
3) HANGER HOLES ARE FOR 3/4 INCH THREADED ROD.
4) ALL DIMENSIONS ARE FOR REFERENCE AND SHOULD NOT BE USED FOR PREFABRICATION OF PIPING OR SUPPORTS.

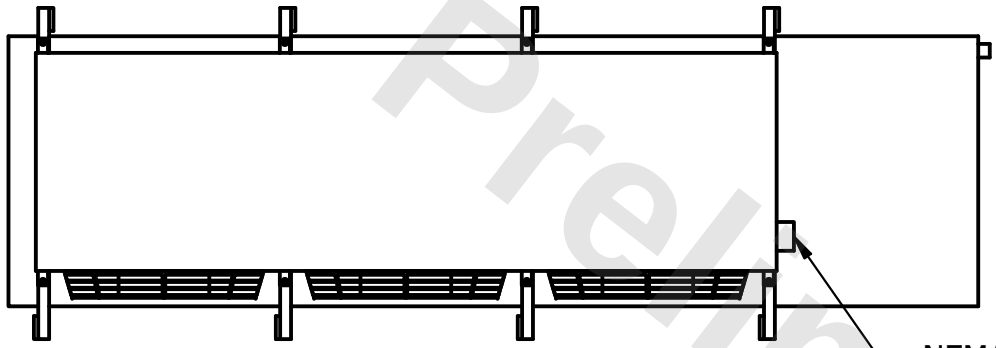


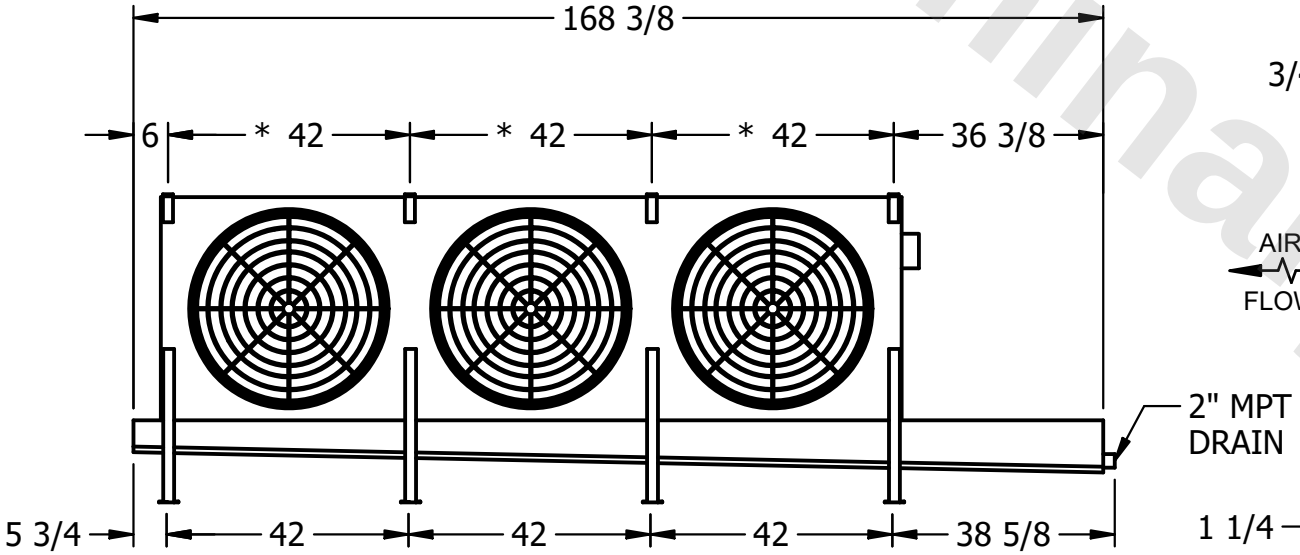


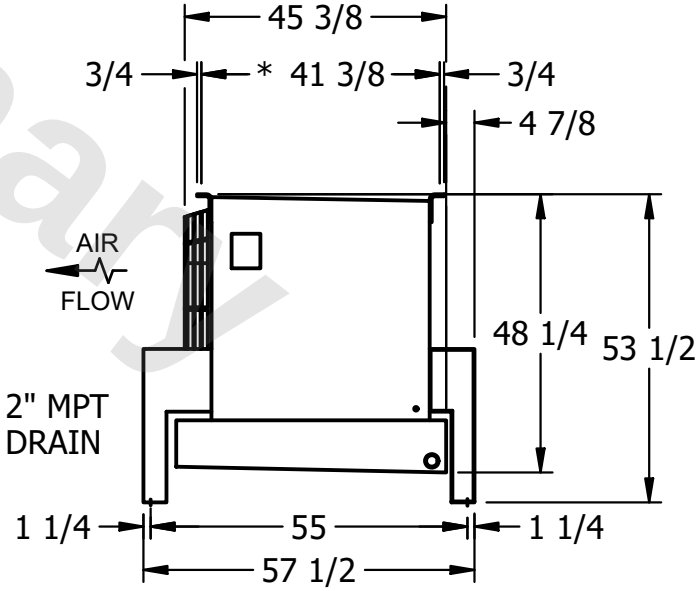


Preliminary

| PROJECT | ROOM | SHIPPING WEIGHT | OPERATING WEIGHT |
|---|---|---|---|
| | | 1710 lbs+ [780] kg+ | 2100 lbs+ [955] kg+ |