CONFIDENTIAL
This document is the property of Evapco, Inc. It should not be copied or disclosed without prior written authorization.

| CUSTOMER | MODEL # | SCALE | DWG. # | REV. | DATE |
|---|---|---|---|---|---|
| | U-EJETME4-5684H0200H1JA | N.T.S. | UEJETM4-SE-24 | 0 | 9/11/2025 |

Preliminary

NOTES:

1) * = HANGER HOLE LOCATION.
2) RIGHT HAND MODEL SHOWN.
3) HANGER HOLES ARE FOR 3/4 INCH THREADED ROD.
4) WATER DEFROST ADDS 1 3/4" INCHES TO HEIGHT OF STANDARD UNIT AND CHANGES DRAIN SIZE.
5) ALL DIMENSIONS ARE FOR REFERENCE AND SHOULD NOT BE USED FOR PREFABRICATION OF PIPING OR SUPPORTS.
6) **= HEIGHT OF SUCTION HEADER AND INSTALLED THERMOWELL FITTING ABOVE CABINET. CUSTOMER IS RESPONSIBLE TO ACCOUNT FOR ADDITIONAL HEIGHT NECESSARY FOR RTD AND ACCESS.

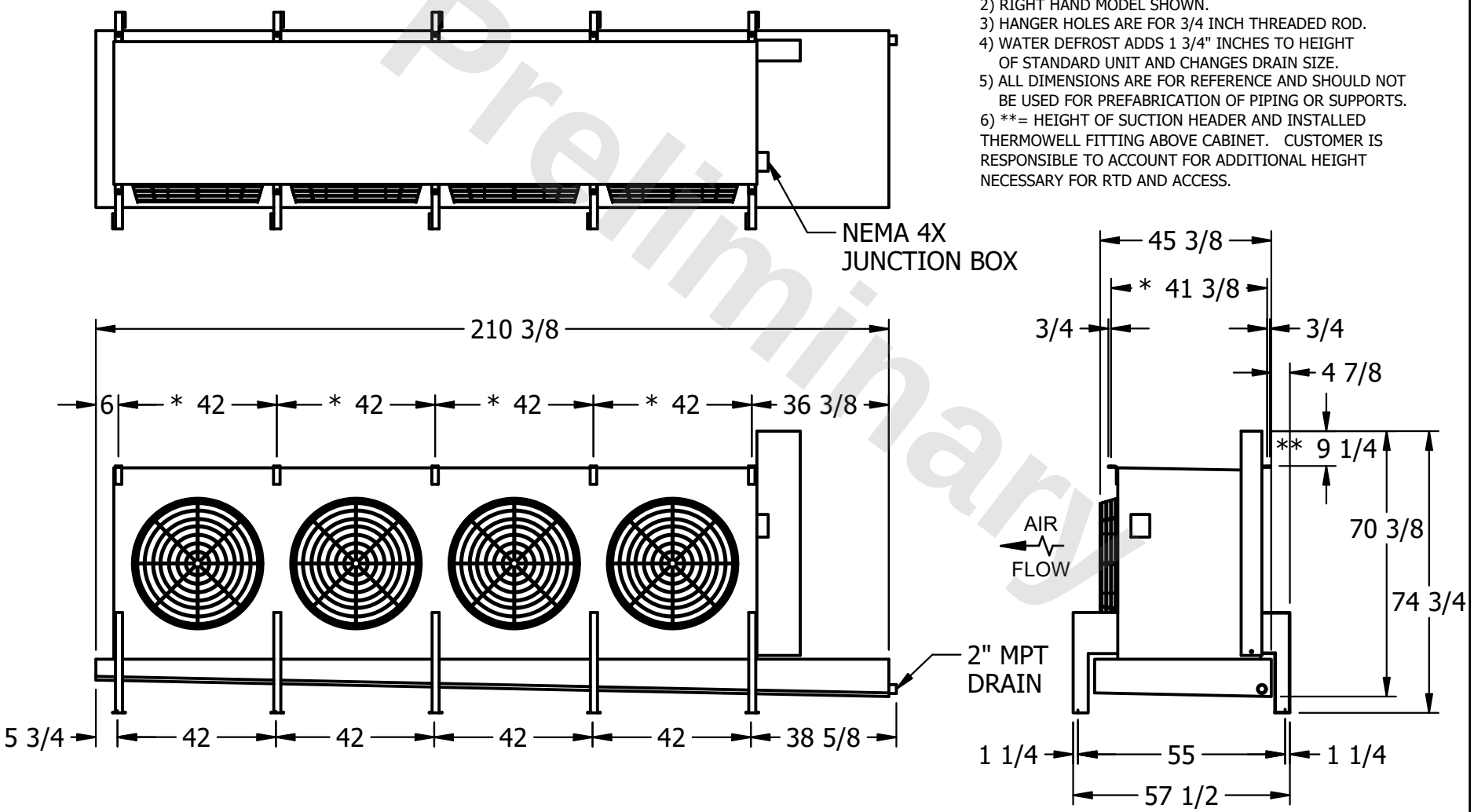


| PROJECT | ROOM | SHIPPING WEIGHT | OPERATING WEIGHT |
|---|---|---|---|
| | | 3170 lbs+ [1440] kg+ | 3700 lbs+ [1680] kg+ |