EVAPCO, INC.

UNIT	MODEL #	SCALE	DWG. #	REV.	DATE	SERIAL #
CLOSED CIRCUIT COOLER			WB3124012-DRB-SR			

NOTES:
1. (M)- FAN MOTOR LOCATION
2. HEAVIEST SECTION IS UPPER SECTION
3. MPT DENOTES MALE PIPE THREAD
   FPT DENOTES FEMALE PIPE THREAD
   BFW DENOTES BEVELED FOR WELDING
4. +UNIT WEIGHT DOES NOT INCLUDE ACCESSORIES (SEE ACCESSORY DRAWINGS)
5. *-APPROXIMATE DIMENSIONS DO NOT USE FOR PRE-FABRICATION OF CONNECTING PIPING
6. THE SPRAY PUMP SHOULD BE SIZED FOR 2800 GPM [176.7 L/S] AND 3.2 PSIG [22.1 KPA] AT THE INLET CONNECTION
7. SERIES FLOW PIPING AND AUX. CROSSOVER DRAIN BY OTHERS.

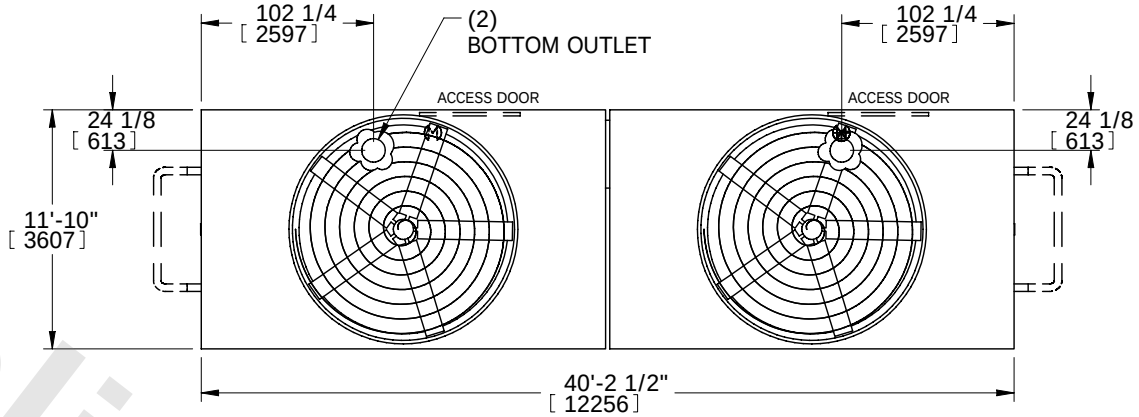

FACE 2
PLAN VIEW

FACE 1

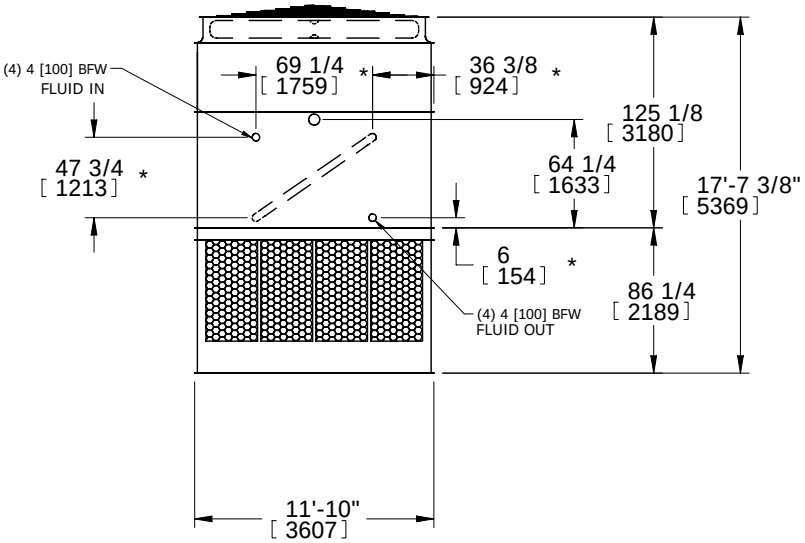

FACE 2

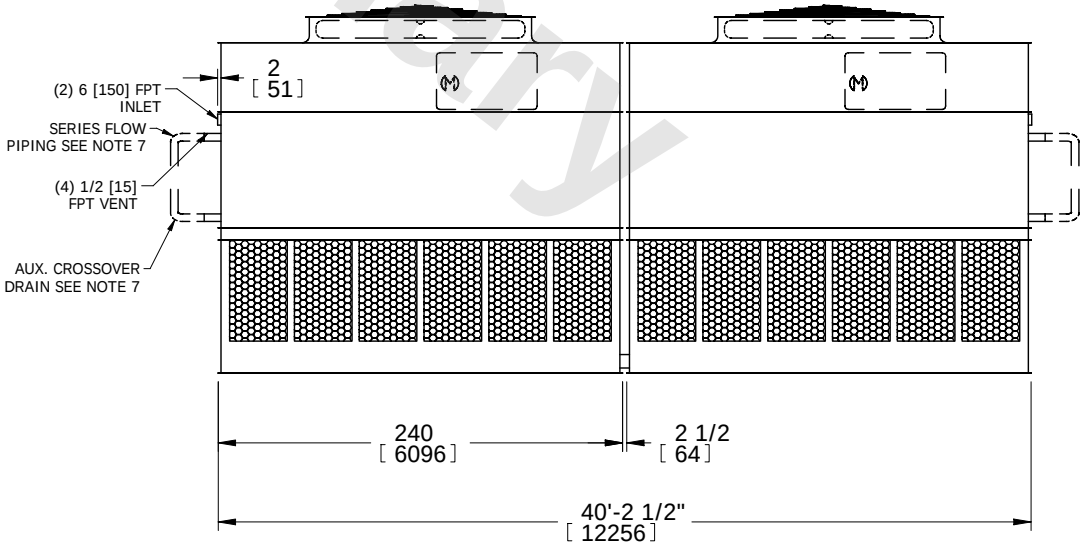

FACE 1

Preliminary

SHIPPING WEIGHT	OPERATING WEIGHT	HEAVIEST SECTION WEIGHT	NO. OF SHIPPING SECTIONS
68780 lbs+ [31198] kg+	92520 lbs+ [41966] kg+	29880 lbs+ [13553] kg+	4