EVAPCO, INC.

UNIT	MODEL #	SCALE	DWG. #	REV.	DATE	SERIAL #
WET / DRY COOLER	AT 110-2I12	NTS	WDW726963-MRC-SLF		4/26/2024	

NOTES:

1. HEAVIEST SECTIONS ARE LD (LOWER DRY) AND UW (UPPER WET).
2. WEIGHTS SHOWN DO NOT INCLUDE ACCESSORY WEIGHTS. REFER TO APPROPRIATE ACCESSORY DRAWINGS.
3. REFER TO RIGGING AND ASSEMBLY INSTRUCTIONS BEFORE LIFTING AND INSTALLATION.
4. CONNECTIONS ARE BFW (BEVELED FOR WELDING).
5. CONNECTION LOCATIONS ARE APPROXIMATE. DO NOT USE FOR PRE-FABRICATION OF CONNECTING PIPING. OTHER DIMENSIONS TO NEAREST 5mm.
6. REFER TO STEEL SUPPORT DRAWING FOR WEIGHT LOADING AND SUPPORT DETAILS.

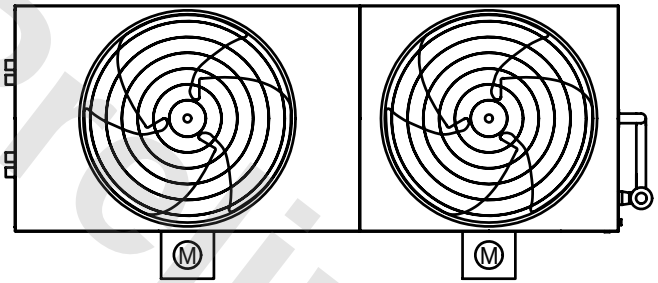

PLAN VIEW

	Description	Qty.	mm
A	Fluid Out	2	100
B	Fluid In	2	100
C	Make-up	1	50
D	Drain	1	50
E	Overflow	1	80
M	Fan Motor	2	
X	Access Door	3	
H	Total height		4420
LD	Lower dry section		2650
UD	Upper dry section		1770
LW	Lower wet section		1315
UW	Upper wet section		3105
CC	Coil dimension		1200

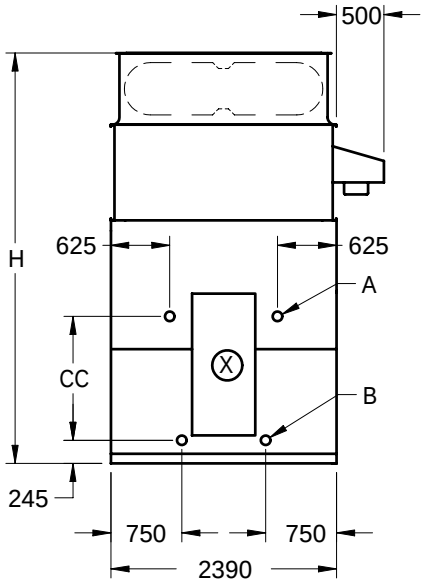

END ELEVATION

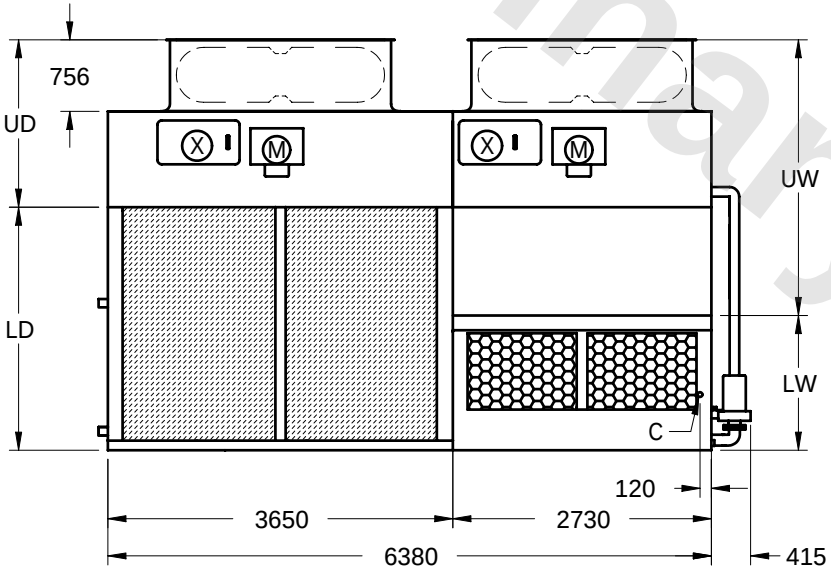

SIDE ELEVATION

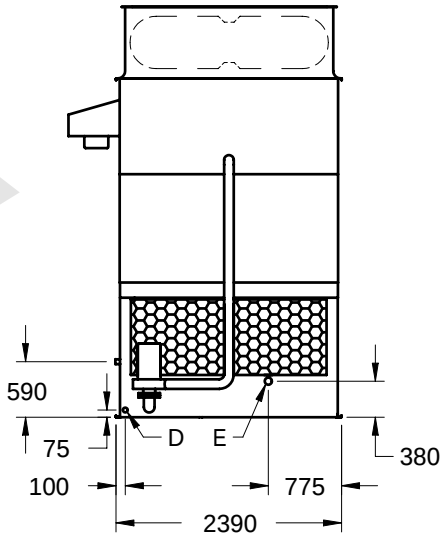

END ELEVATION

Preliminary

SHIPPING WEIGHT	8835	kg	OPERATING WEIGHT	11415	kg	HEAVIEST SECTION WEIGHT	4740	kg	NO. OF SHIPPING SECTIONS :	4