Operation and Maintenance Instructions

FOR EVAPCO INDUCED DRAFT AND FORCED DRAFT COOLING TOWERS

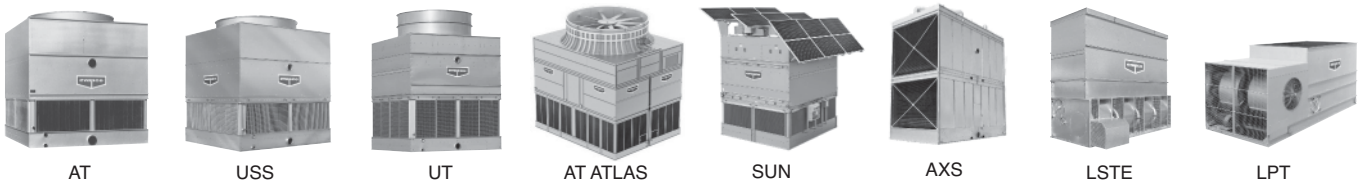

AT | USS | UT | AT ATLAS | SUN | AXS | LSTE | LPT

For EVAPCO Authorized Parts and Service, Contact Your Local EVAPCO Representative or the Local Mr. GoodTower® Service Provider

EVAPCO, Inc. — World Headquarters & Research/Development Center

EVAPCO, Inc. • P.O. Box 1300 • Westminster, MD 21158 USA
PHONE: 410-756-2600 • FAX: 410-756-6450 • E-MAIL: marketing@evapco.com

EVAPCO North America

EVAPCO, Inc.
World Headquarters
P.O. Box 1300
Westminster, MD 21158 USA
Phone: 410-756-2600
Fax: 410-756-6450
E-mail: marketing@evapco.com

EVAPCO East
5151 Allendale Lane
Taneytown, MD 21787 USA
410-756-2600 p l 410-756-6450 f
marketing@evapco.com

EVAPCO East
Key Building
Taneytown, MD USA
410-756-2600 p
marketing@evapco.com

EVAPCO Midwest
Greenup, IL USA
217-923-3431 p
evapcomw@evapcomw.com

EVAPCO West
Madera, CA USA
559-673-2207 p
contact@evapcowest.com

EVAPCO Iowa
Lake View, IA USA
712-657-3223 p

EVAPCO Iowa
Sales & Engineering
Medford, MN USA
507-446-8005 p
evapcomn@evapcomn.com

EVAPCO Newton
Newton, IL USA
618-783-3433 p
evapcomw@evapcomw.com

EVAPCOLD
Greenup, IL USA
217-923-3431 p
evapcomw@evapcomw.com

EVAPCO-BLCT Dry Cooling, Inc.
1011 US Highway 22 West
Bridgewater, NJ 08807 USA
Phone: 1-908-379-2665
E-mail: info@evapco-blct.com

EVAPCO-BLCT Dry Cooling, Inc.
7991 Shaffer Parkway
Littleton, CO 80127 USA
Phone: 1-908-379-2665
E-mail: info@evapco-blct.com
Spare Parts Phone: 908-895-3236
Spare Parts e-mail: spares@evapco-blct.com

EVAPCO Power México S. de R.L. de C.V.
Calle Iglesia No. 2, Torre E
Tizapan San Ángel, Del. Álvaro Obregón
Ciudad de México, D.F. México 01090
Phone: +52 (55) 8421-9260
e-mail: info@evapco-blct.com

Refrigeration Valves & Systems Corporation
A wholly owned subsidiary of EVAPCO, Inc.
Bryan, TX USA
979-778-0095 p
rvs@rvscorp.com

EvapTech, Inc.
A wholly owned subsidiary of EVAPCO, Inc.
Lenexa, KS USA
913-322-5165 p
marketing@evaptech.com

Tower Components, Inc.
A wholly owned subsidiary of EVAPCO, Inc.
Ramseur, NC USA
336-824-2102 p
mail@towercomponentsinc.com

EVAPCO Alcoil, Inc.
A wholly owned subsidiary of EVAPCO, Inc.
York, PA USA
717-347-7500 p
info@alcoil.net

EVAPCO Europe

EVAPCO Europe BVBA
European Headquarters
Heersteveldweg 19
Industrieterrein Oost
3700 Tongeren, Belgium
Phone: (32) 12-395029
Fax: (32) 12-238527
E-mail: evapco.europe@evapco.be

EVAPCO Europe, S.r.l.
Milan, Italy
(39) 02-939-9041 p
evapcoeurope@evapco.it

EVAPCO Europe, S.r.l.
Sondrio, Italy

EVAPCO Europe GmbH
Meerbusch, Germany
(49) 2159 6956 18 p
info@evapco.de

EVAPCO Air Solutions
A wholly owned subsidiary of EVAPCO, Inc.
Aabybro, Denmark
(45) 9824 4999 p
info@evapco.dk

EVAPCO Air Solutions GmbH
Garbsen, Germany
(49) 5137 93875-0 p
info@evapcoas.de

Evap Egypt Engineering Industries Co.
A licensed manufacturer of EVAPCO, Inc.
Nasr City, Cairo, Egypt
2 02 24022866/2 02 24044997 p
primacool@link.net / shady@primacool.net

EVAPCO S.A. (Pty.) Ltd.
A licensed manufacturer of EVAPCO, Inc.
Isando 1600, Republic of South Africa
(27) 11-392-6630 p
evapco@evapco.co.za

EVAPCO Asia/Pacific

EVAPCO Asia/Pacific Headquarters
1159 Luoning Rd. Baoshan Industrial Zone
Shanghai 200949, P.R. China
Phone: (86) 21-6687-7786
Fax: (86) 21-6687-7008
E-mail: marketing@evapcochina.com

EVAPCO (Shanghai) Refrigeration Equipment Co., Ltd.
Baoshan Industrial Zone Shanghai, P.R. China
(86) 21-6687-7786 p
marketing@evapcochina.com

Beijing EVAPCO Refrigeration Equipment Co., Ltd.
Huairou District Beijing, P.R. China
(86) 10-6166-7238 p
evapcobj@evapcochina.com

EVAPCO Australia (Pty.) Ltd.
Riverstone NSW 2765, Australia
(61) 2 9627-3322 p
sales@evapco.com.au

EVAPCO Composites Sdn. Bhd
Rawang, Selangor, Malaysia
(60-3) 6092-2209 p

EvapTech Asia Pacific Sdn. Bhd
A wholly owned subsidiary of EvapTech, Inc.
Puchong, Selangor, Malaysia
(60-3) 8070-7255 p
marketing-ap@evaptech.com

EVAPCO South America

EVAPCO Brasil
Equipamentos Industriais Ltda.
Al. Vênus, 151 – CEP: 13347-659
Indaiatuba –São Paulo – Brasil
(55+11) 5681-2000 p
vendas@evapco.com.br

Fan Technology Resource
Cruz das Almas – Indaiatuba
São Paulo, Brasil 13308-200
55 (11) 4025-1670
fantr@fantr.com

EVAPCO...*SPECIALISTS IN HEAT TRANSFER PRODUCTS AND SERVICES.*

Visit **EVAPCO's** Website at: **www.evapco.com**

Table of Contents

Introduction 4
Safety Precautions 4
Initial Storage and/or Idle Period Recommendations 4
International Building Code Provision 4
Initial and Seasonal Start-Up Checklist 5
General 5
Initial and Seasonal Start-Up 5
Recommended Maintenance Schedule 6-7
Seasonal Shut-Down Checklist 7
Basic Cooling Tower Sequence of Operation 8
System Off/No Load 8
System/Condensing Temperature Rises 8
System Temperature Stabilizes 8
System Temperature Drops 8
System Off/No Load 8
Bypass Mode 8
Optional Defrost Cycle 8
Fan System 9
Fan Motor Bearings 9
Fan Shaft Ball Bearings 9
Fan Belt Adjustment 10-11
Gear Drives 12
Air Inlet 12
Fan System Capacity Control 12
Fan Motor Cycling 12
Sequence of Operation for Fan Motor Cycling 12
Two Speed Motors 12
Variable Frequency Drives 13
Recirculated Water System Routine Maintenance 14
Suction Strainer in Cold Water Basin 14
Cold Water Basin 14
Operating Water Levels 15
Water Make Up Valve 15
Pressurized Water Distribution System 16
Gravity Fed Water Distribution Systems 17
Bleed-Off Valve 17
Water Treatment and Water Chemistry 17
Bleed or Blowdown 17
Galvanized Steel - Passivation 18
Water Chemistry Parameters 18
Control of Biological Contamination 19
Gray Water and Reclaimed Water 19
Air Contamination 19
Stainless Steel 19
Maintaining the Appearance of Stainless Steel 20
Cleaning of Stainless Steel 20
Cold Weather Operation 20
Unit Layout 21
Freeze Protection of Recirculating Water 21
Unit Piping 21
Unit Accessories 21-22
Capacity Control Methods for Cold Weather Operation 22
Ice Management 22

Troubleshooting **23-26**
Replacement Parts **26**
Part Identification Drawings 27
AT/USS 4' Wide Towers 27
AT/USS 6', 7.5', 8' & 8.5' Wide (per cell) Towers – Side Connection 28
AT/USS 6', 7.5', 8' & 8.5' Wide (per cell) Towers – End Connection 29
AT/USS 7' Wide (per cell) Towers – End Connection 30
AT/USS 10', 12', & 14' Wide (per cell) Towers – Side Connection 31
AT/USS 10' & 12' Wide' (per cell) Towers – End Connection 32
AT/USS 14' x 24' (per cell) Towers – Side Inlet Connection, End Outlet 33
AT/USS 14' x 26' (per cell) Towers – End Connection 34
AT/USS 14' x 26' (per cell) Towers – Side Connection 35
AT/USS 42' x 26' (three cell) Towers – Bottom Inlet Connection, Bottom Outlet 36
AT/USS 56' x 26' (four cell) Towers – Bottom Inlet Connection, Bottom Outlet 37
UT All Box Sizes (per cell) Towers - Side or End Connections 38
AT Atlas 39
AXS Towers - Single Stack and Double Stack 40
AXS Towers All Box Sizes - Units with Super Low Sound Fans 41
SUN 8.5' Wide Towers - Side Connection 42
SUN 12' Wide Towers - Side Connection 43
LPT Towers 44
LSTE 4' & 5' Wide Towers 45
LSTE 8' & 10' Wide Towers 46

Introduction

Congratulations on the purchase of your EVAPCO evaporative cooling unit. EVAPCO equipment is constructed of the highest quality materials and designed to provide years of reliable service when properly maintained.

Thoroughly clean road salt, dirt and debris from unit immediately after delivery. Residue left on product surfaces can cause damage that is not covered by any warranty.

Evaporative cooling equipment is often remotely located and periodic maintenance checks are often overlooked. It is important to establish a regular maintenance program and be sure that the program is followed. This bulletin should be used as a guide to establish a program. A clean and properly serviced unit will provide a long service life and operate at peak efficiency.

This bulletin includes recommended maintenance services for unit start up, unit operation and unit shutdown and the frequency of each. Please note: the recommendations of frequency of service are minimums. Services should be performed more often when operating conditions necessitate.

Become familiar with your evaporative cooling equipment. Refer to the isometric drawings located on pages 27-45 for information on the arrangement of components in your equipment.

If you should require any additional information about the operation or maintenance of this equipment, contact your local EVAPCO representative. You may also visit www.evapco.com or www.mrgoodtower.com for more information.

Safety Precautions

Qualified personnel should use proper care, procedures and tools when operating, maintaining or repairing this equipment in order to prevent personal injury and/or property damage. The warnings listed below are to be used as guidelines only.

WARNING: This equipment should never be operated without fan screens and access doors properly in place and secured.

WARNING: Solar panels generate power whenever they are exposed to light. Before performing any type of service or maintenance of the solar array make certain that the Solar Disconnect has been locked in the in the "OFF" position. To fully eliminate power from the panels they should be completely covered with an opaque material.

WARNING: A lockable disconnect switch should be located within sight of the unit for each fan motor associated with this equipment. Before performing any type of service or inspection of the unit make certain that all power has been disconnected and locked in the "OFF" position.

WARNING: The top horizontal surface of any unit is not intended to be used as a working platform. No routine service work is required from this area.

WARNING: The recirculating water system may contain chemicals or biological contaminants including Legionella Pneumophila, which could be harmful if inhaled or ingested. Direct exposure to the discharge airstream and the associated drift generated during operation of the water distribution system and/or fans, or mists generated while cleaning components of the water system require respiratory protection equipment approved for such use by governmental occupational safety and health authorities.

Initial Storage and/or Idle Period Recommendations

If the unit will sit idle for long periods of time it is recommended that the following be performed in addition to all component manufacturers recommended maintenance instructions.

- The fan bearings and motor bearings need to be turned by hand at least once a month. This can be accomplished by locking and tagging out the unit's disconnect, grasping the fan assembly, and rotating it several turns.
- If unit sits longer than a few weeks, run gear reducer (if supplied) for 5 minutes weekly or check sheaves and bushings for corrosion. Scrape and coat with ZRC.
- If unit sits longer than 3 weeks, completely fill gear reducer with oil. Drain to normal level prior to running.
- If unit sits longer than 3 weeks, lubricate the fan shaft bearings and motor adjustment all-thread bolt.
- If unit sits longer than one month, insulation test motor windings semi-annually.
- If fan motor sits idle for at least 24 hours while the spray pumps are energized distributing water over the heat transfer media, motor space heaters (if equipped) should be energized. Alternatively, fan motors may be energized for 10 minutes, twice daily, to drive any moisture condensation out of the motor windings.

International Building Code Provisions

The International Building Code (IBC) is a comprehensive set of regulations addressing the structural design and installation requirements for building systems – including HVAC and industrial refrigeration equipment. The code provisions require that evaporative cooling equipment and all other components permanently installed on a structure must meet the same seismic design criteria as the building.

All items attached to Evapco Cooling Towers must be independently reviewed and isolated to meet applicable wind and seismic loads. This includes piping, ductwork, conduit, and electrical connections. These items must be flexibly attached to the EVAPCO unit so as not to transmit additional loads to the equipment as a result of seismic or wind forces.

Initial and Seasonal Start-Up Checklist

General

1. Verify that the overall installation reflects the requirements of the installation guidelines found in EVAPCO's Equipment Layout Manual available at www.evapco.com.
2. For multi-speed fan motors, verify that 30 second or greater time delays are provided for speed changes when switching from high to low speed. Also check to see if interlocks are provided to prevent simultaneously energizing high and low speed and confirm both speeds operate in the same direction.
3. Verify all safety interlocks work properly.
4. For units operating with a variable frequency drive, make certain that minimum speed requirements have been set. Check with VFD manufacturer for setting/programming minimum speed and recommendations on locking out resonance frequencies. See "Fan System Capacity Control" section for more information.
5. Verify that the sensor used for fan sequencing and/or bypass valve control is located downstream of the point where the bypass water mixes with the condenser supply water, if applicable.
6. Verify that a water treatment plan has been implemented including passivation of galvanized steel units. See "Water Treatment" section for more details.
7. For units subject to freezing climates, high humidity climates, or idle periods lasting 24 hours or more, motor space heaters (if equipped) should be energized. Alternatively, fan motors may be energized for 10 minutes, twice daily, to drive any moisture condensation out of the motor windings.
8. If the unit is going to sit idle for an extended period of time, follow all manufacturers' fan motor instructions for long term storage. Plastic sheets or tarps should never be used to protect a unit during storage. This practice can trap heat inside the unit, and could potentially cause damage to plastic components. See your local EVAPCO representative for additional information on unit storage.

BEFORE BEGINNING ANY MAINTENANCE, BE CERTAIN THAT THE POWER IS TURNED OFF AND THE UNIT IS PROPERLY LOCKED AND TAGGED OUT!

Initial and Seasonal Start-Up

1. Clean and remove any debris, such as leaves and dirt from the air inlets.
2. Flush the cold water basin (with the strainer screens in place) to remove any sediment or dirt.
3. Remove the strainer screen, clean and reinstall.
4. Check mechanical float valve to verify it operates freely.
5. Inspect water distribution system nozzles and clean as required. Check for proper orientation. See Pressurized Water Distribution Section for details. *(This is not required at initial start-up. The nozzles are clean and set at the factory)*.
6. Check to ensure drift eliminators are securely in place and in proper orientation.
7. Adjust fan belt tension as required. See "Fan Belt Adjustment" section.
8. Lubricate fan shaft bearings prior to seasonal start-up.
9. Turn the fan(s) by hand to ensure it turns freely without obstructions.
10. Visually inspect the fan blades. Blade clearance should be a minimum of 1/4" from tip of blade to the fan cowl. The fan blades should be securely tightened to the fan hub.
11. If any stagnant water remains in the system including "dead legs" in the piping, the unit must be disinfected prior to the fans being energized. Please refer to ASHRAE Guideline 12-2000 and CTI Guideline WTP-148 for more information.
12. Manually fill the cold water basin up to the overflow connection.

Seasonal Start up - SUN Cooling Towers

1. If any physical damage to a panel is noticed, the panel should be replaced. Physical damage includes cracked glass, delamination or corrosion.
2. Shading – trees or modification to neighboring structures can cause shadows on the array. A small shadow may drastically reduce that panels output. If possible remove the source of the shadow.
3. Inverters are continually monitored on the Enlighten web site. The site should be periodically checked to determine that the inverters are performing properly.

After the unit has been energized, check the following:

1. Adjust mechanical float valve as required to the proper water level.
2. Unit basin should be filled to the proper operating level. See "Recirculating Water System – Operating Levels" section for more details.
3. Verify fan is rotating in proper direction.
4. Measure voltage and current on all three power leads. The current should not exceed the motor nameplate full load amp rating taking the service factor into account.
5. Adjust bleed valve to proper flow rate. Maximum bleed off is 3 US GPM per 100 tons. Consult your qualified water treatment expert to fine tune the minimum bleed necessary.
6. Refer to the fan motor manufacturer's maintenance and long term storage instructions for more detailed information. Motors should be serviced in accordance with manufacturer's instructions.

Recommended Maintenance Schedule

PROCEDURE	FREQUENCY
1. Clean pan strainer	Monthly or as needed
2. Clean and flush pan**	Quarterly or as needed
3. Check bleed-off valve to make sure it is operative	Monthly
4. Check operating level in pan and adjust float valve if necessary	Monthly
5. Check water distribution system and spray pattern	Monthly
6. Check drift eliminators	Quarterly
7. Check the fan blades for cracks, missing balancing weights, and vibrations	Quarterly
8. Check sheaves, bushings, fan shafts and fan hubs for corrosion. Scrape and coat with ZRC	Annually
9. Lubricate fan shaft bearings*	Every 1000 hours of operation (or every three months)
10. Check belt tension and adjust	Monthly
11. Sliding motor base – Inspect and grease	Annually or as needed
12. Check fan screens, inlet louvers and fans. Remove any dirt or debris	Monthly
13. Inspect and clean protective finish - Galvanized: scrape and coat with ZRC - Stainless: clean and polish with a stainless steel cleaner.	Annually
14. Check water quality for biological contamination. Clean unit as needed and contact a water treatment company for recommended water treatment program**	Regularly
15. Check AXS (crossflow) hot water basins for debris and corrosion	Monthly

OPTIONAL ACCESSORIES:

1. Gear Reducer – Check oil level with unit stopped	24 hours after start-up & monthly
2. Gear Reducer/Piping – Do visual inspection for oil leaks, auditory inspection for unusual noises and vibrations	Monthly
3. Gear Reducer – Replace oil	Semi-annually
4. Oil Pump – Do visual inspection for leaks and proper wiring	Monthly
5. Gear Reducer/Coupling – Check alignment of the system	24 hours after start-up & monthly
6. Coupling/Shaft – Inspect flex elements and hardware for tightness, proper torque & crack/deterioration	Monthly
7. Heater Controller – Inspect controller and clean probe ends	Quarterly
8. Heater – Inspect junction box for loose wiring and moisture	One month after start-up and semi-annually

* See maintenance manual for start-up instructions and lubrication recommendations.
** Cooling Towers must be cleaned on a regular basis to prevent the growth of bacteria including Legionella Pneumophila.

Recommended Maintenance Schedule *(continued)*

OPTIONAL ACCESSORIES:

9. Heater – Inspect elements for scale build-up	Quarterly
10. Electronic Water Level Controller – Inspect junction box for loose wiring and moisture	Semi-annually
11. Electronic Water Level Controller – Clean probe ends of scale build-up	Quarterly or as needed
12. Electronic Water Level Controller – Clean inside the standpipe	Annually
13. Solenoid Make-up Valve – Inspect and clean valve and strainer of debris	As needed
14. Vibration Switch (mechanical) – Inspect enclosure for loose wiring and moisture	One month after start-up and monthly
15. Vibration Switch – Adjust the sensitivity	During start-up and annually
16. Sump Sweeper Piping – Inspect and clean piping of debris	Semi-annually
17. Water Level Indicator – Inspect and clean	Annually
18. SUN Solar Panels – Inspect for damage and clean with hose and soft brush	Semi-annually

DURING IDLE PERIODS:

Idle Period	Recommended Action	Frequency
Two or More Days	Energize motor space heaters - or run motors for 10 minutes	Twice daily
Few Weeks	Run gear reducer for 5 minutes	Weekly
Several Weeks	Completely fill gear reducer with oil. Drain to normal level prior to running.	Once
One Month or Longer	Rotate motor shaft/fan 10 turns	Bi-weekly
	Megger test motor windings	Semi-annually

Seasonal Shut-Down Checklist

When the system is to be shut down for an extended period of time, the following services should be performed.

1. The evaporative cooling unit cold water basin should be drained.
2. The cold water basin should be flushed and cleaned with the suction strainer screens in place.
3. The suction strainer screens should be cleaned and reinstalled.
4. The cold water basin drain should be left open.
5. The fan shaft bearings and motor base adjusting screws should be lubricated. This should also be performed if the unit is going to sit idle prior to start up.
6. The water make up valve needs to be closed. All water make-up, overflow and drain piping needs to be drained, if not heat traced and insulated. Electronic Water Level Control (EWLC) should be heat traced and insulated if equipped.
7. The finish of the unit should be inspected. Clean and refinish as required.
8. The fan bearings and motor bearings need to be turned at least once a month by hand. This can be accomplished by making sure the unit's disconnect is locked and tagged out, and grasping the fan assembly, rotating it several turns.
9. Energize motor space heaters.

See Fan & Pump Manufacturer Maintenance and long term storage instructions for more detailed instructions.

Basic Cooling Tower Sequence of Operation

System Off / No Load

The system pumps and fans are off. If the basin is full of water a minimum basin water temperature of 40ºF must be maintained to prevent freezing. This can be accomplished with the use of optional basin heaters. See the “Cold Weather Operation” section of this bulletin for more details on cold weather operation and maintenance.

System/Condensing Temperature Rises

The system pump turns on. The unit will provide approximately 10% cooling capacity with only the pump running.

NOTE: If the load is such that simply running the system pump with the unit fan motor idle is sufficient, motor space heaters (if equipped) should be energized while the motor is idle. Alternatively, the motor can be energized twiced daily for a minimum of 10 minutes to protect the motor insulation from damage.

If the system temperature continues to rise, the unit fan is cycled on. For a variable speed controller, the fans are turned on to minimum speed. See the “Fan System – Capacity Control” section of this bulletin for more details on fan speed control options. If the system temperature continues to rise, then the fan speed is increased as required, up to full speed.

NOTE: During sub-freezing weather the minimum recommended speed for variable speed controllers is 50%. ALL FANS IN OPERATING CELLS OF MULTIPLE CELL UNITS MUST BE CONTROLLED TOGETHER TO PREVENT ICING ON THE FANS.

System Temperature Stabilizes

Control the leaving water temperature by modulating the fan speeds with variable speed drives or by cycling fans on and off with single or two-speed drives.

System Temperature Drops

Decrease the fan speed, as required.

System Off/No Load

The system pump turns off. The starter interlock will energize any optional basin heaters in cold weather.

Bypass Mode

During winter months when cooling load is minimal, bypass mode may be used as a form of capacity control. Bypass mode allows the water to “bypass” the tower’s water distribution system and deposits the inlet water directly into the cold water basin. Alternatively, the incoming water bypass can be piped directly to the return condenser header pipe. Please note: The location of the bypass valve should be 15 feet below the cooling tower cold water basin elevation to assure proper operation and prevent cavitation. This bypass mode should be continued until the total water inventory reaches an acceptable temperature level (usually about 80°F), at which time the bypass may be closed to cause total flow over the fill.

EVAPCO does NOT recommend a partial water bypass due to the potential for freezing the heat transfer media during low ambient operation.

Optional Defrost Cycle

In more severe climates, the incorporation of a defrost cycle may be used to manage the ice formation in and on the unit. During the defrost cycle, the cooling tower fan(s) are reversed at no more than half speed while the system pump flows water through the cooling tower’s water distribution system. Operating the unit in “reverse” will melt any ice that has formed in the unit or on the intake louvers. All multi-speed or VFD duty motors supplied by EVAPCO, whether for standard belt drive or optional gear drive induced draft units, are capable of reverse operation.

Defrost cycles are NOT recommended for forced draft cooling towers. In these units, allowing the leaving water temperature set point to rise causes the fans to be off for very long periods of time, which increases the fan drive component potential for freezing. In lieu of a defrost cycle, forced draft units should be operated at low speed (with a 2-speed motor) or minimum speed (no lower than 25% with a variable frequency drives) in order to maintain positive pressure inside the unit to help prevent ice formation on the fan drive components.

NOTE: MINIMUM CONTROL POINT FOR WATER SHOULD NEVER BE LOWER THAN 42º F.

Fan System

The fan systems of both centrifugal and axial driven units are rugged, however, the fan system must be checked regularly and lubricated at the proper intervals. The following maintenance schedule is recommended.

Fan Motor Bearings

EVAPCO evaporative cooling units use either a T.E.A.O. (Totally Enclosed Air Over) or a T.E.F.C. (Totally Enclosed Fan Cooled) fan motor. These motors are built to “Cooling Tower Duty” specifications. They are supplied with permanently lubricated bearings and special moisture protection on the bearings, shaft and windings. After extended shut-downs, the motor should be checked with an insulation tester prior to restarting the motor.

Fan Shaft Ball Bearings

Lubricate the fan shaft bearings every 1,000 hours of operation or every three months for induced draft units. Lubricate the fan shaft bearings every 2,000 hours of operation or every six months for forced draft units. Use any of the following synthetic waterproof, polyurea based greases which are suitable for operation between -20°F and 350°F. (For colder operating temperatures, contact the factory).

Mobil – Polyrex EM Chevron - SRI

Feed grease slowly into the bearings or the seals may be damaged. A hand grease gun is recommended for this process. When introducing a new grease, all grease should be purged from the bearings.

All EVAPCO units are supplied with extended grease lines to allow easy lubrication of the fan shaft bearings as shown in Table 1.

Unit Description	Location of Lube Line Fittings
Induced Draft Units: AT/UT/USS Externally Mounted Motors	Located just inside the fan casing access door
Induced Draft Units: AT/UT/USS Internally Mounted Motors	Located inside the fan casing access door
Induced Draft Units: AXS	Located inside unit on mechanical support assembly
LSTE Forced Draft Units	Located on the side of the unit
LPT Forced Draft Units	Located on air intake face of the unit

Table 1 - Location of Grease Lube Line Fittings for Belt Driven Units.
Please note, the removal of the fan screens is not necessary on forced draft units to access the extended lube line fittings.

Fiberglass Super Low Sound Fan

Fan Blades

Quarterly visual inspections are recommended to check the overall condition of the fiberglass fan blades. Clean using a mild detergent to remove any dirt on the surface of the blades. Thoroughly rinse with water after cleaning.

Discoloration and surface imperfections are normal. Cracks in the external gel coat layer may occur, however if cracks appear deeper than the surface gel coat layer please consult your local EVAPCO representative for further inspection.

Hub and Bolts (multi-piece 132” and 156” diameter fans only)

The hub bolts should be checked bi-annually for proper torque. The torque values are noted on the fan hub nameplate.

The hub and bolts should be checked annually for corrosion. If present, scrape and coat with ≥ 95% Zinc Rich Compound (ZRC).

Fan Belt Adjustment

The fan belt tension should be checked at start up and again after the first 24 hours of operation to correct for any initial stretch. To properly adjust the belt tension, position the fan motor so that the fan belt will deflect approximately 1/2" when moderate pressure is applied midway between the sheaves. Figure 1 and Figure 2 show two ways to measure this deflection. Belt tension should be checked on a monthly basis. A properly tensioned belt will not "chirp" or "squeal" when the fan motor is started.

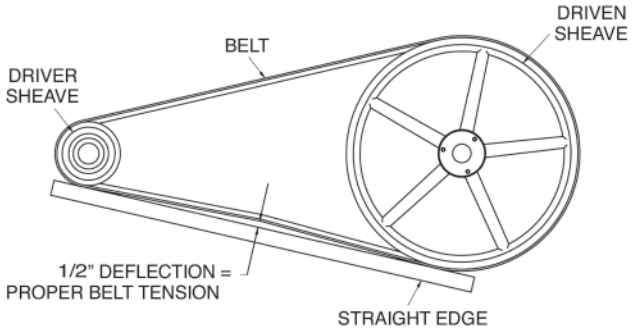

Figure 1 – Method 1

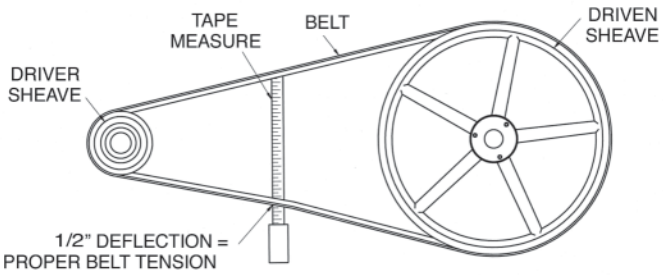

Figure 2 – Method 2

On induced draft belt driven units provided with externally mounted motors, as shown in Figure 3, and LSTE forced draft units, as shown in Figure 4, both J-type adjustment bolts on the adjustable motor base should have an equal amount of exposed thread for proper sheave and belt alignment.

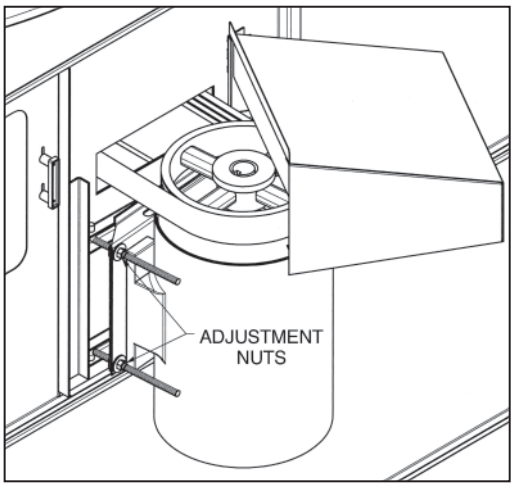

Figure 3 – Externally Mounted Motors, AT/UT/USS Units

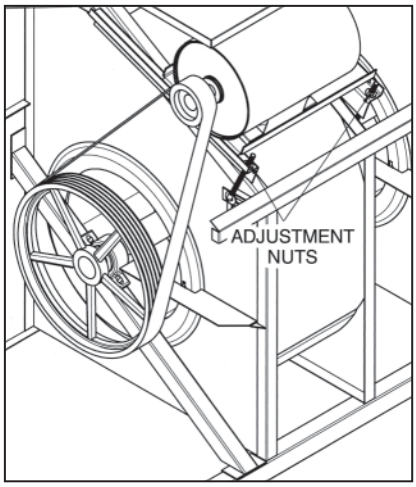

Figure 4 – Externally Mounted Motors, LSTE Units

On induced draft belt driven units with internally mounted motors, as shown in Figures 5 and 6 and LPT units, as shown in Figure 7, a motor adjustment tool is provided. The tool will be found on the adjustment nut. To use, place the hex end over the adjustment nut. Tension the belt by turning the nut in the appropriate direction. When the belts are properly tensioned, tighten the lock nut.

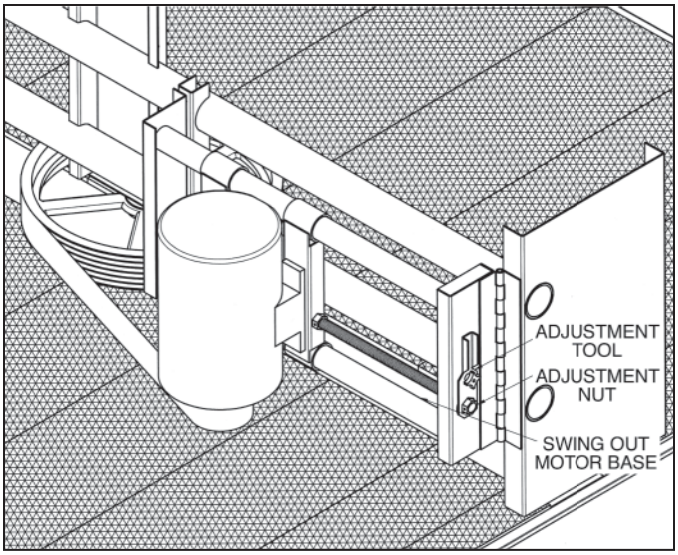

Figure 5 – Internally Mounted Motors, AT/UT/USS Units

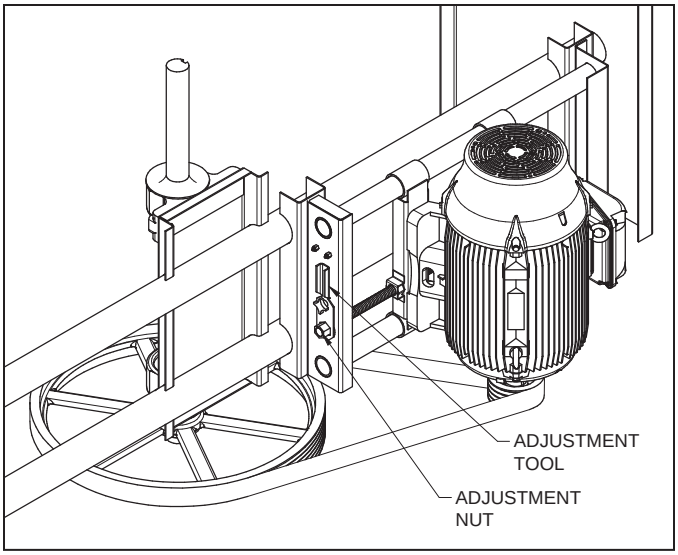

Figure 6 – Internally Mounted Motors, AXS Units

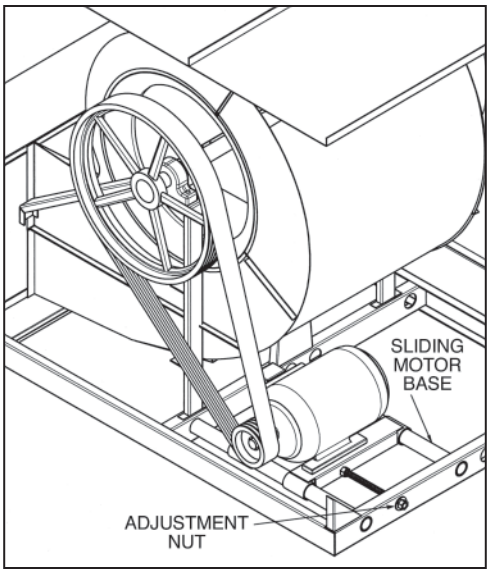

Figure 7 – Externally Mounted Motors, LPT Units

Gear Drives

Induced draft units with gear drive systems require special maintenance. Please refer to the gear manufacturer's recommended maintenance instructions. These will be enclosed and shipped with the unit.

Air Inlet

Inspect the air inlet louvers (induced draft units) or fan screens (forced draft units) monthly to remove any paper, leaves or other debris that may be blocking airflow into the unit.

Fan System — Capacity Control

There are several methods for capacity control of the evaporative cooling unit. Methods include: Fan motor cycling, the use of two speed motors and the use of variable frequency drives (VFD's). In all cases, if motors are idle for extended periods of time with water still being directed over heat transfer media, motor space heaters are suggested.

Fan Motor Cycling

Fan Motor Cycling requires the use of a single stage thermostat which senses the water temperature. The contacts of the thermostat are wired in series with the fan motor's starter holding coil.

Sequence of Operation for Fan Motor Cycling

Fan Motor Cycling is often found to be inadequate where the load has a wide fluctuation. In this method, there are only two stable levels of performance: 100% of capacity when the fan is on and approximately 10% of capacity when the fan is off. Please note, rapid cycling of the fan motors can cause the fan motor to overheat. Controls should be set to only allow a maximum of six (6) start/stop cycles per hour.

Two Speed Motors

The use of a two speed motor provides an additional step of capacity control when used with the fan cycling method. The low speed of the motor will provide approximately 60% of full speed capacity.

Two speed capacity control systems require not only a two speed motor, but a two stage thermostat and the proper two speed motor starter. The most common two speed motor is a single winding type. This is also known as a consequent pole design. Two speed two winding motors are also available. All multi-speed motors used in evaporative cooling units should be variable torque design.

It is important to note that when two speed motors are to be used, the motor starter controls must be equipped with a decelerating time delay relay. The time delay should be a minimum of a 30 second delay when switching from high speed to low speed.

Sequence of Operation for Two Fan Units with Two Speed Motors During Peak Load

1. Both fan motors on full speed – full water flow over both cells
2. One fan motor on high speed, one fan motor on low speed – full water flow over both cells
3. Both fan motors on low speed – full flow over both cells
4. One fan motor on low speed, one fan motor off – full water flow over both cells
5. Both fan motors off – full water flow over both cells
6. Both fan motors off – full single cell flow through one cell

Variable Frequency Drives

The use of a variable frequency drive (VFD) provides the most precise method of capacity control. A VFD is a device that converts a fixed AC voltage and frequency and changes it into an AC adjustable voltage and frequency used to control the speed of an AC motor. By adjusting the voltage and frequency, the AC induction motor can operate at many different speeds.

The use of VFD technology can also benefit the life of the mechanical components with fewer and smoother motor starts and built in motor diagnostics. VFD technology has particular benefit on evaporative cooling units operating in cold climates where airflow can be modulated to minimize icing and reversed at low speed for de-icing cycles. Applications using a VFD for capacity control must also use an inverter duty motor built in compliance with NEMA standard MG-1. This is a standard option from EVAPCO.

The type of motor, manufacturer of the VFD, motor lead lengths (between the motor and the VFD), conduit runs and grounding can dramatically affect the response and life of the motor. Select a high quality VFD that is compatible with the fan motor(s) in the EVAPCO unit(s). Many variables in the VFD configuration and installation can affect motor and VFD performance. Two particularly important parameters to consider when choosing and installing a VFD are switching frequency and the distance between the motor and VFD often referred to as lead length. Consult the VFD manufacturer's recommendations for proper installation and configuration. The motor lead length restrictions can vary with the vendor. Regardless of motor supplier, minimizing lead length between the motor and drive is good practice.The motor lead length restrictions may vary with the motor vendor.

Sequence of Operation for Multi-fan Units with a VFD During Peak Load

1. The VFDs should all be synchronized to speed up and slow down uniformly.
2. The VFDs need to have a pre-set shutoff to prevent water temperatures from becoming too cold and to prevent the drive from trying to turn the fan at near zero speed.
3. Operating below 25% of motor speed achieves very little return in fan energy savings and capacity control. Unless otherwise stated in your factory submittal, 25% is the lowest recommended fan speed.

Variable Frequency Drive Lock-out Notification

SAFETY PRECAUTIONS:

Qualified personnel should use proper care, procedures and tools when maintaining the Fan/Drive System in order to prevent personal injury and/or property damage.

Identify and Lock-out Harmful Resonant Frequencies

A Variable Frequency Drive (VFD) fan system, unlike traditional fixed-speed systems, is designed to operate between 25% (15Hz) and 100% (60Hz) speeds, which creates an opportunity for operation where resonant frequencies exist. Sustained operation at resonant frequencies may lead to excessive vibration, fatigue of structural components, and/or drive system noise and failure. Owners and operators must anticipate the existence of resonant frequencies and lock out frequencies during start-up and commissioning in order to prevent drive system operational problems and structural damage. As a part of the normal start-up and commission processes, resonant frequencies should be identified and locked-out in the VFD's software.

The unit's supporting structure, external piping, and accessories contribute to the overall harmonic make-up and stiffness of the system. The choice of VFD will also have a significant influence on how the system behaves. Consequently, not all resonant frequencies can be determined in advance at the manufacturer's factory during final inspection and testing. Relevant resonant frequencies (if they occur) can only be identified accurately after the unit installation in the system.

To check for resonant frequencies in the field, a run-up and run-down test must be performed. Additionally, VFD carrier frequencies should be adjusted to best align the VFD with the electrical system. Refer to your drive's start-up procedures for additional information and instruction.

The procedure of checking for resonant frequencies requires stepping through the VFD's operating range at (2) Hz intervals from the lowest operating frequency to full speed. At each step, pause long enough for the fan to reach steady-state. Note changes in unit vibration during this time. Repeat from full speed to minimum speed. Should vibration-inducing frequencies exist, the run-up and run-down test will isolate the resonant frequencies which then must then be locked-out in the VFD programming.

For more details on the use of variable frequency drives, please reference the "Variable Frequency Drives" document located under technical references, in the document library on www.evapco.com.

Recirculated Water System – Routine Maintenance

Suction Strainer in Cold Water Basin

The pan strainer should be removed and cleaned monthly or as often as necessary. The suction strainer is the first line of defense in keeping debris out of the system. Make certain that the strainer is properly located over the pump suction, alongside the anti-vortexing hood.

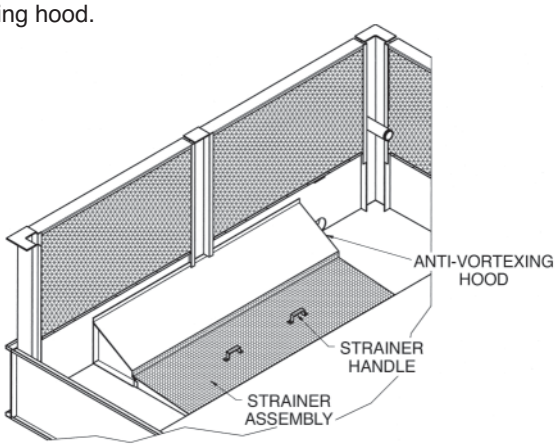

Figure 8 – Single Strainer Assembly

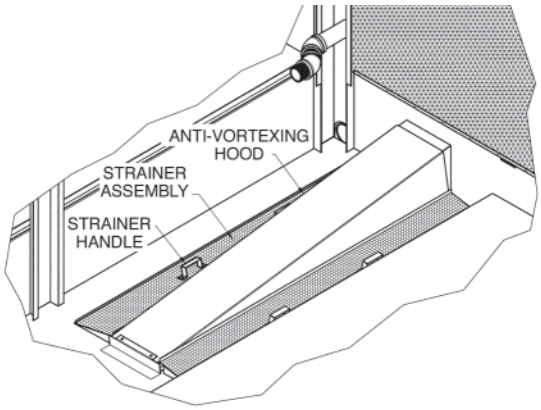

Figure 9 – Dual Strainer Assembly

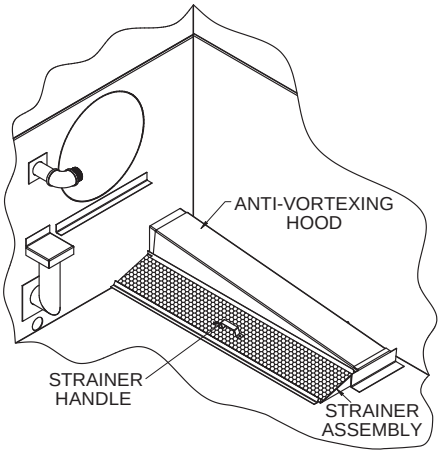

Figure 10 – LSTE Strainer Assembly

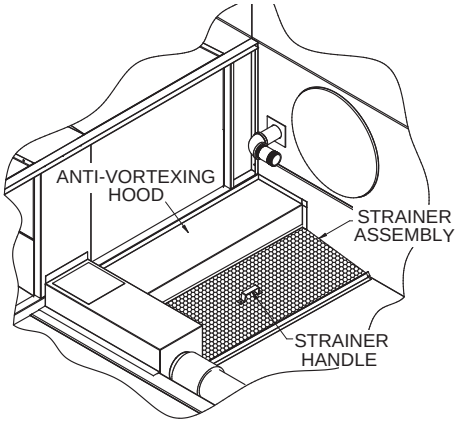

Figure 11 – LPT Strainer Assembly

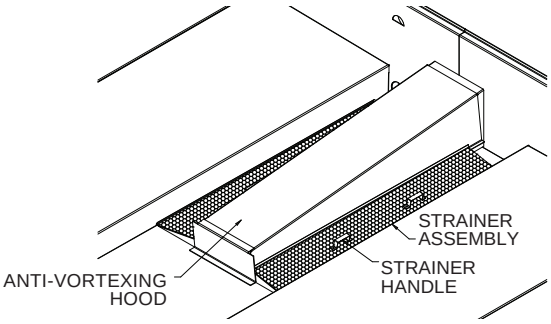

Figure 12 – AXS Strainer Assembly

Cold Water Basin

The cold water basin should be flushed out quarterly, and checked monthly or more often if necessary, to remove any accumulation of dirt or sediment which normally collects in the basin. Sediment can become corrosive and cause deterioration of basin materials. When flushing the basin, it is important to keep the suction strainers in place to prevent any sediment from entering the system. After the basin has been cleaned, the strainers should be removed and cleaned before refilling the basin with fresh water.

Operating Level of Water in Cold Water Basin

The operating level should be checked monthly to make sure the water level is correct. Refer to Table 2 for unit specific levels.

Product Line	Box	Operating Depth*
AT/UT/USS	4' Wide	7"
AT/UT/USS	14' Wide, Atlas & Four Cell Units	11"
AT/UT/USS/SUN	All Others	9"
AXS	All	9"
LPT	All	8"
LSTE	10' Wide	13"
LSTE	All Others	9"

* Measured from lowest point on basin floor.

Table 2 - Recommended Operating Water Level

At initial start up or after the unit has been drained, the unit must be filled to the overflow level. Overflow is above the normal operating level and accommodates the volume of water normally in suspension in the water distribution system and some of the piping external to the unit.

The water level should always be above the strainer. Check by running the system pump with the fan motors off and observing the water level through the access door or remove the air inlet louver.

Water Make Up Valve

A mechanical float valve assembly is provided as standard equipment on the evaporative cooling unit (unless the unit has been ordered with an optional electronic water level control package or the unit is arranged for remote sump operation). The make up valve is easily accessible from outside the unit through the access door, louver access door, or removable air inlet louver. The make up valve is a bronze valve connected to a float arm assembly and is activated by a large foam filled plastic float. The float is mounted on an all threaded rod held in place by wing nuts. The water level in the basin is adjusted by repositioning the float and threaded rod using the wing nuts. Refer to Figure 13 for details.

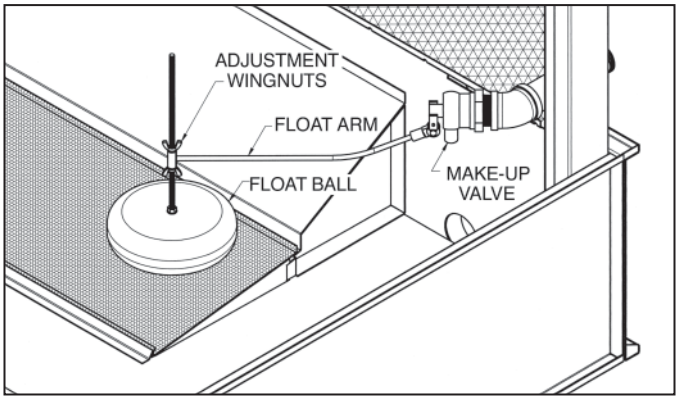

Figure 13 – Mechanical Water Make Up Valve

The make up valve assembly should be inspected monthly and adjusted as required. The valve should be inspected annually for leakage and if necessary, the valve seat should be replaced. The make up water pressure for the mechanical valve should be maintained between 20 and 50 PSIG.

Pressurized Water Distribution Systems

All EVAPCO cooling towers are supplied with wide orifice spray nozzles. The water distribution system should be checked monthly to make sure it is operating properly. Always check the spray system with the pump on and the fans off (locked and tagged out).

On forced draft units (LSTE and LPT models), remove one or two eliminator sections from the top of the unit and observe the operation of the water distribution system.

On induced draft units (AT, SUN, USS and UT models), lifting handles are provided on several sections of eliminators within reach of the access door. Eliminators can be easily removed from outside of the unit to observe the water distribution system. The spray nozzles are non-clogging and should seldom need cleaning or maintenance.

If the spray nozzles are not functioning properly, it is a sign that the suction strainer has not been working properly and that foreign matter or dirt has accumulated in the water distribution pipes. The nozzles can be cleared by taking a small pointed probe and moving it back and forth in the diffuser opening.

If an extreme buildup of dirt or foreign matter occurs, remove the end cap in each branch to flush the debris from the header pipe. The spray branches and header can be removed for cleaning, but should only be done if absolutely necessary.

After the spray nozzles have been cleaned, the suction strainer should be checked to make sure it is in good operating condition and positioned properly so that air entrapment does not occur.

When inspecting and cleaning the water distribution system, always check that the orientation of the spray nozzles is correct as shown below for LSTE, LPT models in Figure 14 and as shown in Figure 15 for AT, SUN, USS and UT models. Check or ensure that the top of the EVAPCO logo on the nozzle is parallel with the top of the water distribution pipe, as shown in Figure 15.

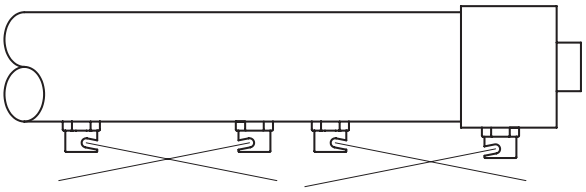

Figure 14 – LSTE/LPT Water Distribution

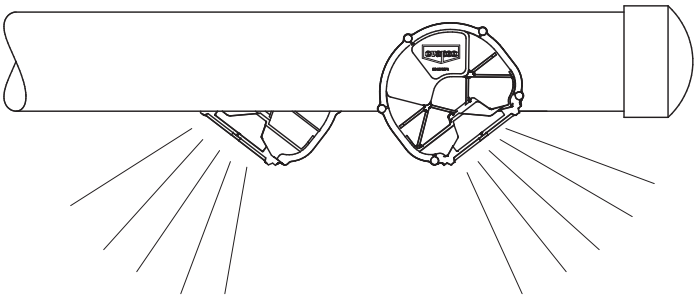

Figure 15 – AT/SUN/USS/UT Water Distribution

Gravity Fed Water Distribution Systems

All induced draft crossflow units (AXS) utilize a water distribution system that relies on gravity to disperse water through the spray nozzles. Lifting handles are provided on the hot water basin covers to allow access to the water distribution system as shown in Figure 16.

If the spray nozzles are not functioning properly, it is a sign that the suction strainer has not been working properly and that foreign matter or dirt has accumulated in the hot water basins. The spray nozzles can be cleared by taking a small pointed probe and moving it back and forth in its opening; or, by removing the nozzle and cleaning it under a hose.

After the spray nozzles have been cleaned, the suction strainer should be checked to make sure it is in good operating condition and positioned properly so that air entrapment does not occur.

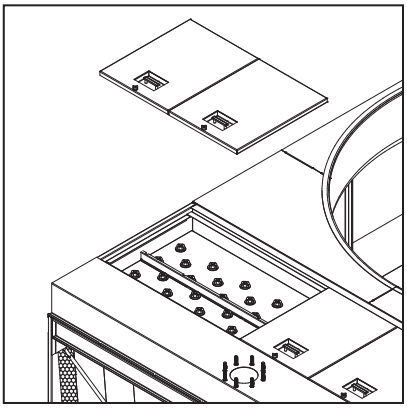

Figure 16 – Hot Water Basins

Bleed-Off Valve

The bleed-off valve, whether factory or field installed, must be checked weekly to make sure it is functioning and set properly. Keep the bleed-off valve wide open unless it has been determined that it can be set partially open without causing scaling or corrosion.

Water Treatment and Water Chemistry

Proper water treatment is an essential part of the maintenance required for evaporative cooling equipment. A well designed and consistently implemented water treatment program will help to ensure efficient system operation while maximizing the equipment's service life. A qualified water treatment company should design a site specific water treatment protocol based on equipment (including all metallurgies in the cooling system), location, makeup water quality, and usage.

Bleed or Blowdown

Evaporative cooling equipment rejects heat by evaporating a portion of the recirculated water into the atmosphere as warm, saturated discharge air. As the pure water evaporates it leaves behind the impurities found in the system's makeup water and any accumulated airborne contaminants. These impurities and contaminants, which continue to recirculate in the system, must be controlled to avoid excessive concentration which can lead to corrosion, scale, or biological fouling.

Evaporative cooling equipment requires a bleed or blowdown line, located on the discharge side of the recirculating pump, to remove concentrated (cycled up) water from the system. EVAPCO recommends an automated conductivity controller to maximize the water efficiency of your system. Based on recommendations from the water treatment company, the conductivity controller should open and close a motorized ball or solenoid valve to maintain the conductivity of the recirculating water. If a manual valve is used to control the rate of bleed it should be set to maintain the conductivity of the recirculating water during periods of peak load at the maximum level recommended by the water treatment company.

Galvanized Steel – Passivation

'White Rust' is a premature failure of the protective zinc layer on hot dip or mill galvanized steel which can occur as a result of improper water treatment control during the start-up of new galvanized equipment. The initial commissioning and passivation period is a critical time for maximizing the service life of galvanized equipment. EVAPCO recommends that the site specific water treatment protocol includes a passivation procedure which details water chemistry, any necessary chemical addition, and visual inspections during the first six (6) to twelve (12) weeks of operation. During this passivation period, recirculating water pH should be maintained above 7.0 and below 8.0 at all times. Since elevated temperatures have a harmful effect on the passivation process, the new galvanized equipment should be run without load for as much of the passivation period as is practical.

The following water chemistry promotes the formation of white rust and should be avoided during the passivation period:

1. pH values in the recirculating water greater than 8.3.
2. Calcium hardness (as CaCO3) less than 50 ppm in the recirculating water.
3. Anions of chlorides or sulfates greater than 250 ppm in the recirculating water.
4. Alkalinity greater than 300 ppm in the recirculating water regardless of pH value.

Changes in water chemistry control may be considered after the passivation process is complete as evidenced by the galvanized surfaces taking on a dull gray color. Any changes to the treatment program or control limits should be made slowly, in stages while documenting the impact of the changes on the passivated zinc surfaces.

- Operating galvanized evaporative cooling equipment with a water pH below 6.0 for any period may cause removal of the protective zinc coating.
- Operating galvanized evaporative cooling equipment with a water pH above 9.0 for any period may destabilize the passivated surface and create white rust.
- Re-passivation may be required at any time in the service life of the equipment if an upset condition occurs which destabilizes the passivated zinc surface.

For more information on passivation and white rust, please reference the "White Rust" document located under technical references, in the document library on www.evapco.com.

Water Chemistry Parameters

The water treatment program designed for evaporative cooling equipment must be compatible with the unit's materials of construction. Control of corrosion and scale will be very difficult if the recirculating water chemistry is not consistently maintained within the ranges noted in Table 3. In mixed metallurgy systems, the water treatment program should be designed to ensure protection of all the components used in the cooling water loop.

Property	G-235 Galvanized Steel	Type 304 Stainless Steel	Type 316 Stainless Steel
pH	7.0 – 8.8	6.0 – 9.5	6.0 – 9.5
pH During Passivation	7.0 – 8.0	N/A	N/A
Total Suspended Solids (ppm)*	< 25	< 25	< 25
Conductivity (Micro-mhos/cm) **	< 2,400	< 4,000	< 5,000
Alkalinity as CaCO3 (ppm)	75 - 400	< 600	< 600
Calcium Hardness CaCO3 (ppm)	50 - 500	< 600	< 600
Chlorides as Cl (ppm) ***	< 300	< 500	< 2,000
Silica (ppm)	< 150	< 150	< 150
Total Bacteria (cfu/ml)	< 10,000	< 10,000	< 10,000

* Based on standard EVAPAK® fill
** Based on clean metal surfaces. Accumulations of dirt, deposits, or sludge will increase corrosion potential
*** Based on maximum coil fluid temperatures below 120°F (49°C)

Table 3 – Recommended Water Chemistry Guidelines

If a chemical water treatment program is used, all chemicals selected must be compatible with the unit's materials of construction as well as other equipment and piping used in the system. Chemicals should be fed through automatic feed equipment to a point which ensures proper control and mixing prior to reaching the evaporative cooling equipment. Chemicals should never be batch fed directly into the basin of the evaporative cooling equipment.

Evapco does not recommend the routine use of acid due to the destructive consequences of improper feeding; however, if acid is used as part of the site specific treatment protocol, it should be pre-diluted prior to introduction into the cooling water and fed by automated equipment to an area of the system which ensures adequate mixing. The location of the pH probe and acid feed line should be designed in conjunction with the automated feedback control to ensure that proper pH levels are consistently maintained throughout the cooling system. The automated system should be capable of storing and reporting operational data including pH reading and chemical feed pump activity. Automated pH control systems require frequent calibration to ensure proper operation and to protect the unit from increased corrosion potential.

The use of acids for cleaning should also be avoided. If acid cleaning is required, extreme caution must be exercised and only inhibited acids recommended for use with the unit's materials of construction should be used. Any cleaning protocol, which includes the use of an acid, shall include a written procedure for neutralizing and flushing the evaporative cooling system at the completion of the cleaning.

Control of Biological Contamination

Evaporative cooling equipment should be inspected regularly to ensure good microbiological control. Inspections should include both monitoring of microbial populations via culturing techniques and visual inspections for evidence of biofouling.

Poor microbiological control can result in loss of heat transfer efficiency, increase corrosion potential, and increase the risk of pathogens such as those that cause Legionnaires ' disease. The site specific water treatment protocol should include procedures for routine operation, startup after a shut-down period, and system lay-up, if applicable. If excessive microbiological contamination is detected, a more aggressive mechanical cleaning and/or water treatment program should be undertaken.

It is important that all internal surfaces, particularly the basin, be kept clean of accumulated dirt and sludge. Additionally, drift eliminators should be inspected and maintained in good operating condition.

Gray Water and Reclaimed Water

The use of water reclaimed from another process as a source of makeup water for evaporative cooling equipment can be considered as long as the resultant recirculating water chemistry conforms to the parameters noted in Table 3. It should be noted that using water reclaimed from other processes may increase the potential of corrosion, microbiological fouling, or scale formation. Gray water or reclaimed water should be avoided unless all of the associated risks are understood and documented as part of the site specific treatment plan.

Air Contamination

Evaporative cooling equipment draws in air as part of normal operation and can scrub particulates out of the air. Do not locate the unit next to smokestacks, discharge ducts, vents, flue gas exhausts, etc. because the unit will draw in these fumes which may lead to accelerated corrosion or deposition potential within the unit. Additionally, it is important to locate the unit away from the building's fresh air intakes to prevent any drift, biological activity, or other unit discharge from entering the building's air system.

Stainless Steel

Stainless steel is the most cost effective material of construction available to extend the life of an evaporative cooling unit.

The stainless steel sheet material utilized by EVAPCO is Type 304 and Type 316 with a No. 2B unpolished finish. Type 304 stainless steel is a basic chromium-nickel austenitic stainless steel and is suitable for a wide range of applications. It is readily available throughout the world and is easy to form during the fabrication process. Type 316 stainless steel offers more corrosion resistance than Type 304 due to the addition of molybdenum and a higher nickel content, which provides greater resistance to pitting and crevice corrosion in the presence of chlorides. As a result, Type 316 stainless steel is desirable in heavy industrial, marine environments and where make up water quality requires it.

Stainless steel provides its superior corrosion resistance by developing a surface film of chromium oxide during the manufacturing process. In order to ensure maximum corrosion protection, stainless steel must be kept clean and have an adequate supply of oxygen to combine with the chromium in the stainless steel to form "chromium-oxide", a protective passivation layer. The protective layer of chromium-oxide develops during routine exposure to the oxygen content in the atmosphere. This occurs during the milling process and continuously as the stainless is formed and shaped for its final use.

Maintaining the Appearance of Stainless Steel

It is a common misconception that stainless steel is stain and rust proof, making surface maintenance not required at all. This is simply not true. Like mill galvanized steel, stainless steel is most effective when kept clean. This is especially true when located in atmospheres with chloride salts, sulfides or other rusting metals. In these environments, stainless steel can discolor, rust or corrode.

Once the unit arrives at the job site, the most effective way of maintaining the stainless steel finish is to keep it clean! At a minimum, the unit should be washed down annually to reduce residual dirt or surface deposits on the stainless steel. In addition, this wash down will keep the stainless steel components free from the corrosive elements in the atmosphere including chlorides and sulfides which are damaging to stainless steel.

Protect stainless steel during unit installation, especially welding of nearby carbon steel pipes as weld stag or other corroding materials may cause staining in stainless steel if not protected or cleaned.

Cleaning of Stainless Steel

1. **Routine Maintenance – Mild Cleaning**

   Simple pressure washing (of sheet metal components only), using household cleaners, detergents or ammonia annually (more frequently in marine or industrial environments) will help maintain the finish and keep it free of atmospheric contaminants.

2. **Minor Surface Dirt – Mildly Aggressive Cleaning**

   Use of a sponge or bristle brush with a non-abrasive cleaner is recommended. After cleaning, rinse with warm water from a hose or pressure washer. Towel dry cleaned area and coat area with a high quality wax to provide extra protection.

3. **More Aggressive Cleaning – Removal of Fingerprints or Grease**

   Repeat processes 1 and 2, then use a hydro-carbon solvent like Acetone or alcohol. As with any hydro-carbon solvent, caution must be taken when using the product. Do not use in confined spaces or while smoking. Keep solvents out of contact with hands and skin. Household glass cleaner, Spic n' Span are other options for cleaners. After cleaning, towel dry and apply a coat of high quality wax for extra protection.

4. **Aggressive Cleaning – Removing Stains or Light Rust**

   If iron contamination or surface staining is suspected, immediately remove the stain or rust using a chrome, brass or silver cleaner. The use of mild non-scratching creams and polishes are also recommended. When the cleaning procedure is complete; use a high quality wax for extra protection.

5. **Most Aggressive Cleaning – Removing Heavy Rust Deposits, Iron Contamination, Spot Weld Discoloration and Weld Spatter using Acid**

   First try processes 1 through 4. If the stain or rust is not removed, the following should be used as a last resort. Rinse the surface with hot water. Use a saturated solution of oxalic or phosphoric acid (10 to 15% acid solution). This should be applied with a soft cloth and allowed to stand for a few minutes – do not rub. This acid should etch out the iron particles. Follow this with an ammonia and water rinse. Rinse the surface again with hot water; coat with a high quality wax for added protection. Use extreme caution when working with acids! Synthetic rubber gloves should be used, goggles and aprons are advisable.

   DO NOT USE THIS METHOD IF THE UNIT HAS GALVANIZED STEEL COMPONENTS.

As a minimum, these guidelines should be followed to maintain and clean the stainless steel unit. When cleaning stainless steel, NEVER use coarse abrasives or steel wool, NEVER clean with mineral acids and NEVER leave stainless in contact with iron or carbon steel.

For more information on cleaning stainless steel, please reference the "Maintaining and Cleaning Stainless Steel" document located under technical references, in the document library on www.evapco.com.

For more information on choosing the appropriate grade of stainless steel, please reference the "300 Series Stainless Steel" document located under technical references, in the document library on www.evapco.com.

Cold Weather Operation

EVAPCO counterflow and crossflow evaporative cooling equipment are both well suited to operate in cold weather conditions.

When the evaporative cooling unit is going to be used during cold weather conditions, several items need to be considered including unit layout, recirculating water, unit piping, unit accessories and capacity control of the units.

Unit Layout

Adequate unobstructed air flow must be provided for both the intake and discharge from the unit. It is imperative that the equipment minimize the risk of recirculation. Recirculation can result in condensation freezing the inlet louvers, fans and fan screens. The buildup of ice on these areas can adversely affect air flow and in more severe cases, lead to failure of these components. Prevailing winds can create icing conditions on the inlet louvers and fan screens adversely affecting airflow to the unit.

For additional information on unit layout, please refer to EVAPCO's Equipment Layout Manual, available in the document library on www.evapco.com.

Freeze Protection of Recirculating Water

The simplest and most effective way of keeping the recirculated water from freezing is to use a remote sump. With a remote sump, the recirculating water pump is mounted remotely at the sump and whenever the pump is shut off, all recirculating water drains back to the sump. Contact your local EVAPCO representative for recommendations for sizing the remote sump tank.

If a remote sump cannot be used, basin heaters are available to keep the recirculating water from freezing when the water is turned off. Electric heaters, hot water coils, steam coils or steam injectors may be used to heat the basin water when the unit is shut down. However, the basin heater will not prevent the external water lines, pump or pump piping from freezing. The make-up water supply, overflow and drain lines must be heat traced and insulated to protect them from damage. Any other connections or accessories at or below the water level, such as electronic water level controllers, must also be heat traced and insulated.

Unit Piping

All external piping (water make up lines, equalizers, riser piping) that is not drained needs to be heat traced and insulated to make certain it does not freeze. All piping should be fitted with drain valves to avoid dead legs which can also lead to Legionella contamination. System piping accessories (make up valves, control valves, water circulation pumps and water level control packages) also require heat tracing and insulation. If any of these items are not properly heat traced and insulated, the ensuing ice formation may result in component failure and cause a shutdown of the cooling unit.

The use of a bypass should also be considered. Typically, winter loads are less than peak summer loads. When this is the case, a cooling tower bypass needs to be incorporated into the system design to allow water to "bypass" the tower's water distribution system as a means of capacity control. EVAPCO recommends that the cooling tower bypass be installed in the condenser water piping system. Bypasses installed in this manner require a section of piping between the condenser water supply and return leading to and from the cooling tower. **Never use a partial bypass during cold weather operation**. Reduced water flow can result in uneven water flow over the heat transfer media (fill), which can cause ice formation.

Please note: bypasses should be periodically flushed to minimize stagnant water conditions, unless the bypass is piped directly into the unit's cold water basin.

Unit Accessories

The appropriate accessories to prevent or minimize ice formation during cold weather operation are relatively simple and inexpensive. These accessories include cold water basin heaters, the use of a remote sump, electric water level control and vibration cut out switches. Each of these optional accessories ensure that the cooling tower will function properly during cold weather operation.

Cold Water Basin Heaters

Optional basin heaters can be furnished with the cooling tower to prevent the water from freezing in the basin when the unit is idle during low ambient conditions. The basin heaters are designed to maintain 40°F basin water temperature at a 0°F (or -20°F & -40°F) ambient temperature. The heaters are only energized when the condenser water pumps are off and no water is flowing over the tower. As long as there is a heat load and water is flowing over the tower, the heaters do not need to operate. Other types of basin heaters to consider would include: hot water coils, steam coils or steam injectors.

Remote Sumps

A remote sump located in an indoor heated space is an excellent way to prevent freezing in the cold water basin during idle or no load conditions because the basin and associated piping will drain by gravity whenever the circulating pump is idle. EVAPCO can provide connections in the cold water basin to accommodate for remote sump installations.

Electric Water Level Control

Optional electric water level control packages can be furnished to replace the standard mechanical float and valve assembly. The make up water pressure for electronic water level control should be maintained betwen 5 and 125 psig. The electric water level control eliminates the freezing problems experienced by the mechanical float. In addition, it provides accurate control of the basin water level and does not require field adjustment even under varying load conditions. Please note: the standpipe assembly, make up piping and solenoid valve must be heat traced and insulated to prevent them from freezing.

Vibration Cut Out Switches

During severe cold weather conditions, ice can form on the fans of cooling towers causing excessive vibration. The optional vibration switch shuts the fan off avoiding potential damage to or failure of the drive system.

Capacity Control Methods for Cold Weather Operation

Induced draft and forced draft cooling towers require separate guidelines for capacity control during cold weather operation.

The sequence of control for a cooling tower operating at low ambient conditions is much the same as a cooling tower operating under summer conditions provided that the ambient temperature is above freezing. When the ambient temperatures are below freezing, additional precautions must be taken to avoid the potential for damaging ice formation or equipment damage.

It is very important to maintain close control of the cooling tower during winter operation. EVAPCO recommends that an absolute MINIMUM leaving water temperature of 42° F must be maintained; obviously, the higher the water temperature from the tower, the lower the potential for ice formation. This assumes that proper water flow over the tower is maintained.

Induced Draft Unit Capacity Control

The simplest method of capacity control is cycling the fan motor on and off in response to the leaving water temperature of the tower. However, this method of control results in larger temperature differentials and longer periods of down time. During extremely low ambient conditions, the moist air may condense and freeze on the fan drive system. **Therefore, fans must be cycled during extremely low ambient conditions to avoid long periods of idle time whether water is flowing over the fill or in bypass. The number of start/stop cycles must be limited to no more than six per hour**.

A better method of control is the use of two speed fan motors. This allows an additional step of capacity control. This additional step reduces the water temperature differential, and therefore, the amount of time the fans are off. In addition, two speed motors provide savings in energy costs, since the tower has the potential to operate on low speed during reduced load requirements.

The best method of capacity control during cold weather operation is the use of a variable frequency drive (VFD). This allows the closest control of the leaving water temperature by allowing the fan(s) to run at the appropriate speed to closely match the building load. As the building load decreases, the VFD control system may operate for long periods of time at fan speeds below 50 percent. Operating a low leaving water temperature and low air velocity through the unit can cause ice to form. It is recommended that the minimum speed of the VFD be set at 50 percent of full speed to minimize the potential for ice to form in the unit. Space heaters in the motors are suggested to help keep the high humidity air from condensing in the motors during idle periods.

Forced Draft Unit Capacity Control

The most common methods of capacity control are cycling the single speed fan motors, using two speed motors or pony motors and utilizing variable frequency drives to control the tower fans. Although capacity control methods for forced draft units are similar to those used for induced draft units, there are slight variations.

The simplest method of capacity control for forced draft units is to cycle the fan(s) on and off. However, this method of control results in larger temperature differentials and periods of time with the fans off. When the fans are cycled off, the water falling through the unit can draw air flow into the fan section. During extremely low ambient conditions, this moist air may condense and freeze on the cold components of the drive system. When conditions change and cooling is needed, any amount of ice that has formed on the drive system can severely damage the fans and fan shafts. **Therefore, fans MUST be cycled during low ambient operation to avoid long periods of idle fan operation. Excessive cycling can damage the fan motors; limit the number of cycles to a maximum of six per hour**.

Two speed or pony motors offer a better method of control. This additional step of capacity control will reduce water temperature differentials and the amount of time that the fans are off. This method of capacity control has proven effective for applications where load variations are excessive and cold weather conditions are moderate.

The use of a variable frequency drive provides the most flexible method of capacity control for forced draft units. The VFD control system allows the fans to run at nearly an infinite range of speeds to match the unit capacity to the system load. During periods of reduced load and low ambient temperatures, the fans can be maintained at a minimum speed which will ensure a positive air flow through the unit. This positive air flow in the unit will prevent moist air from migrating towards the cold fan drive components reducing the potential for condensation to form and freeze on them. The VFD control system should be implemented for applications that experience fluctuating loads and severe cold weather conditions.

Ice Management

When operating an evaporative cooling unit in extreme ambient conditions, the formation of ice is inevitable. The key to successful operation is to control or manage the amount of ice that builds up in the unit. If extreme icing occurs, it can lead to severe operational difficulties as well as potentially damaging the unit. Following these guidelines will minimize the amount of ice that forms in the unit leading to better operation during the cold weather season.

Induced Draft Units

When operating an induced draft unit during the cold weather season, the control sequence must have a method to manage the formation of ice in the unit. The simplest method of managing the amount of ice buildup is by cycling the fan motors off. During these periods of idle fan operation, the warm water that is absorbing the building load flows over the unit to help melt the ice that has formed in the fill, basin or louver areas. **Warning: using this method during periods of high winds can cause blow through, resulting in splash-out and ice formation. To help prevent blow through and splash-out, maintain a minimum 50% fan speed.**

In more severe climates, the incorporation of a defrost cycle can be used to manage the formation of ice in the unit. During the defrost cycle, the fans are reversed at **half speed** while the system pump flows water through the unit's water distribution system. Operating the unit in reverse will melt any ice that has formed in the unit or on the air intake louvers. Please note that the fans may need to be cycled off prior to a defrost cycle to allow the water temperature to rise. **The defrost cycle requires the use of two speed motors with reverse cycle starters or reversible variable frequency drives**. All motors supplied by EVAPCO are capable of reverse operation.

The defrost cycle should be incorporated into the normal control scheme of the cooling tower system. The control system should allow for either a manual or automatic method of controlling frequency and length of time required to completely defrost the ice from the unit. The frequency and length of the defrost cycle is dependent on the control methods and ambient cold weather conditions. Some applications will build ice quicker than others which may require longer and more frequent defrost periods. **Frequent inspection of the unit will help "fine tune" the length and frequency of the defrost cycle**.

Forced Draft Units

Defrost cycles are NOT recommended for forced draft units, since allowing the leaving water temperature set point to rise causes the fans to be off for very long periods of time. This is not recommended for forced draft towers because of the potential for freezing the fan drive components. Therefore, the defrost cycle is an inappropriate method of ice management for forced draft units. However, low speed fan operation or variable frequency drives maintain a positive pressure in the unit which helps prevent ice formation on the fan drive components.

For more information on cold weather operation, please reference the "Cooling Towers - Winter Operation (Free Cooling)" document located under technical references, in the document library on www.evapco.com.

Troubleshooting

Problem	Possible Cause	Remedy
Overamping Fan Motors	Reduction in air static pressure	1. On a forced draft unit verify that the system pump is on, and water is flowing over the fill. If the system pump is off, and the unit was not sized for dry operation, the motor may over-amp. 2. If the forced draft unit is ducted, verify that the design ESP matches the actual ESP. 3. Check the basin water level against the recommended level. **Note: Air density directly affects AMP reading.**
	Electrical issue	1. Check voltage and amps across all three legs of the motor. 2. Verify that the motor is wired per the wiring diagram, and connections are tight.
	Fan rotation	Verify that the fan is rotating in the correct direction. If not, switch the leads so it runs correctly.
	Mechanical failure	Verify that the fan and motor turn freely by hand. If not, there may be damage to the internal motor components or bearings.
	Belt tension	Check for proper belt tension. Extreme belt tension can cause the motor to overamp.

Troubleshooting

Problem	Possible Cause	Remedy
Unusual Motor Noise	Motor running single-phase	Stop motor and attempt to start it. Motor will not start again if single phased. Check wiring, controls and motor.
	Motor leads connected incorrectly	Check motor connections against wiring diagram on motor.
	Bad bearings	Check lubrication. Replace bad bearings.
	Electrical unbalance	Check voltage and current of all three lines. Correct if required.
	Rotor unbalance	Rebalance.
	Cooling fan hitting end bell guard	Reinstall or replace fan.
Incomplete Spray Pattern	Nozzles clogged	Remove nozzles and clean. Flush water distribution system.
	Strainer clogged	Remove strainer and clean.
No solar power is being generated (SUN)	No power from Utility	Verify that there system is connected to the grid. These are grid-interactive inverters and will not produce power without a stable grid connection.
	Utility voltage out of range	Contact Evapco. The acceptable range may be expanded if the utility voltage differs from nominal.
Individual panel-inverter combination does not generate power (SUN)	Poor connection	Verify that both the connection from the solar panel to the inverter and from the inverter to the Enphase cable are tight. Use removal tool to reset connections.
	Utility voltage out of range in one phase	If 4 units are out, check that all 3 phases of utility voltage are in range.
	Inverter failure	Replace inverter
Fan Noise	Blade rubbing inside of fan cylinder (induced draft models)	Adjust cylinder to provide blade tip clearance.
Scaled Inlet Louvers	Improper water treatment, insufficient bleed rates or excessive cycling of the fan motors, or high concentrations of solids in water.	Scale should not be removed using a power washer or wire brush because it could damage the louvers. Remove the louver assemblies and let them soak in the cold water basin of the unit. The water treatment chemicals in the unit will neutralize and dissolve the buildup of scale. Please note that the time required for soaking the inlet louvers depends on the severity of the scale buildup. **Note: This assumes chemicals are being used.**

Problem	Possible Cause	Remedy
Makeup Valve Will Not Shut Off	Make-up water pressure too high	Mechanical make-up valve water pressure must be between 20 and 50psi. If pressure is too high, the valve will not close. A pressure reducing valve can be added to lower the pressure. For the 3 and 5 Probe Electronic Water Level Control Package, the electrical solenoid has a 5 to 125 psi water pressure requirement.
	Debris in solenoid	Clean out solenoid of any debris.
	Frozen float ball	Inspect, and if so, float or valve may need to be replaced.
	Float ball is full of water	Check ball for leaks and replace.
Water Constantly Blowing Out Overflow Connection	This can happen on forced draft units due to the positive pressure in the casing section. Overflow connection has not been piped at all or properly	Pipe the overflow with a P-trap to an appropriate drain.
	Incorrect water level	Verify actual operating level versus O&M recommended levels
Water Intermittently Blowing Out Overflow Connection	This is normal	This is normal.
Cold Water Basin Overflowing	Problem with make-up line.	Refer to Makeup Valve or Electronic Water Level section.
	If multi-cell unit, there may be an elevation problem.	Make sure that multi-cell units are installed level to one another. If they are not, it can cause overflowing in one cell.
Low Pan Water Level	Electronic Water Level Control	See EWLC Section
	Float Ball not set correctly	Adjust float ball up or down to obtain proper water level. Note: The float ball is set to the operating level at the factory.
Rusting Stainless Steel	Foreign material on surface of SS	Rust spots that show up on the surface of the unit are typically not signs of the base stainless steel material corroding. Often, they are foreign material, such as welding slag, that has collected on the surface of the unit. The rust spots will be located around where there has been welding. These areas may include the coil connections, the cold water basin near the support steel, and around field erected platforms and catwalks. The rust spots can be removed with a good cleaning. EVAPCO recommends using either Naval Jelly or a good stainless steel cleaner, such as Mother's Wax in conjunction with a Scotch-Brite pad. Maintenance of the unit's surface should be done on a regular basis.

Problem	Possible Cause	Remedy
Electric Water Level Control Not Working	The valve won't open or close	1. Verify that water pressure is above 5psi and below 125psi. 2. Verify wiring with wiring diagram. Check supply voltage. 3. Verify that there is not a blockage in the Y-Strainer 4. Confirm the probes are not dirty. 5. Check Red LED on circuit board. If it is on, the valve should be closed. **For a 3-Probe Assembly:** ***Simulate "Low Water Condition"* - LED OFF** After cleaning the probes, lift probe assembly out of the stand pipe. This will simulate a "low water condition". Check the contacts for proper position. - The contact between "C" and "NC" should now be closed and water makeup valve should be energized (valve open) ***Simulate "High Water Condition"* - LED ON** - Connect a jumper wire between the longest probe and the shortest probe. The contact between "C" and "NC" should now be open and the water makeup valve should be de-energized (valve closed)
Electric Water Level Control Not Working		**For a 5-Probe Assembly:** ***Simulate "Low Water Condition"*** After cleaning the probes, lift probe assembly out of the stand pipe. This will simulate a "low water condition". Check the contacts for proper position. - Differential Contacts: C to NC - closed - Water make-up valve energized - **LED = OFF** - High Alarm Contacts: C to NO - open - High alarm circuit de-energized - **LED = OFF** - Low Alarm Contacts: C to NC - closed - Low alarm circuit energized - **LED = OFF** ***Simulate "High Water Condition"*** Connect a jumper wire between the longest probe (ground) and all other probes (high limit, high alarm, and low alarm). Check the contacts for proper position. - Differential Contacts: C to NC - open - Water make-up valve de-energized - **LED = ON** - High Alarm Contacts: C to NO - closed - High alarm circuit energized - **LED = ON** - Low Alarm Contacts: C to NC - open - Low alarm circuit de-energized - **LED = ON**

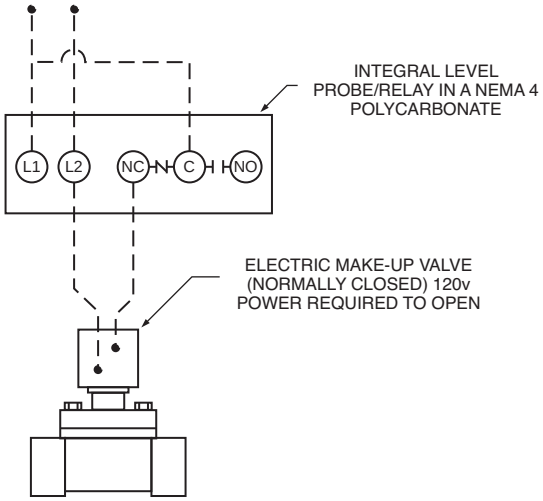

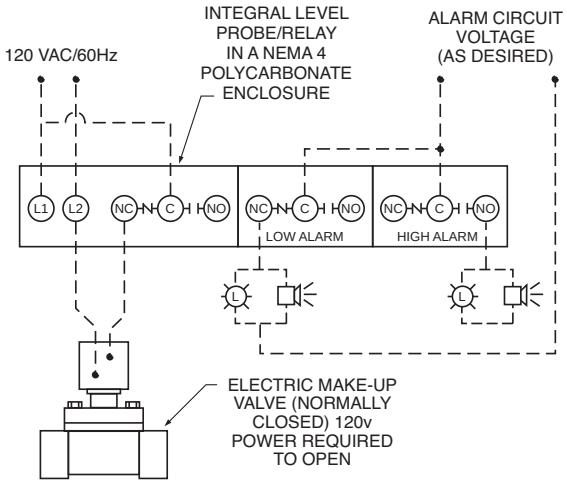

Replacement Parts

EVAPCO has replacement parts available for immediate shipment. Most orders ship within 24 hours from time of order!

The following pages contain exploded view drawings of all current Evapco cooling towers. Please use these drawings to help identify the major parts of your unit.

To order replacement parts, please contact your local EVAPCO representative or Mr. GoodTower Service Center. The EVAPCO representative with contact information is located on the unit's nameplate or can be found by visiting either www.evapco.com or www.mrgoodtower.com.

The local EVAPCO representative or Mr. GoodTower Service Center can provide FREE unit inspections to help ensure your equipment operates at peak performance regardless of the original manufacturer!

AT/USS 4' Wide Towers

FAN & FILL CASING SECTION

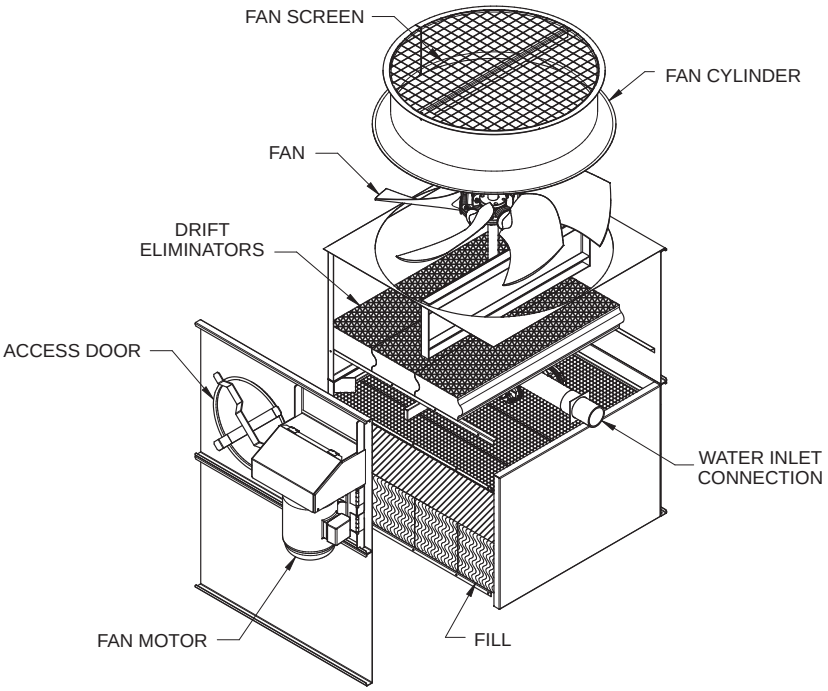

PAN SECTION

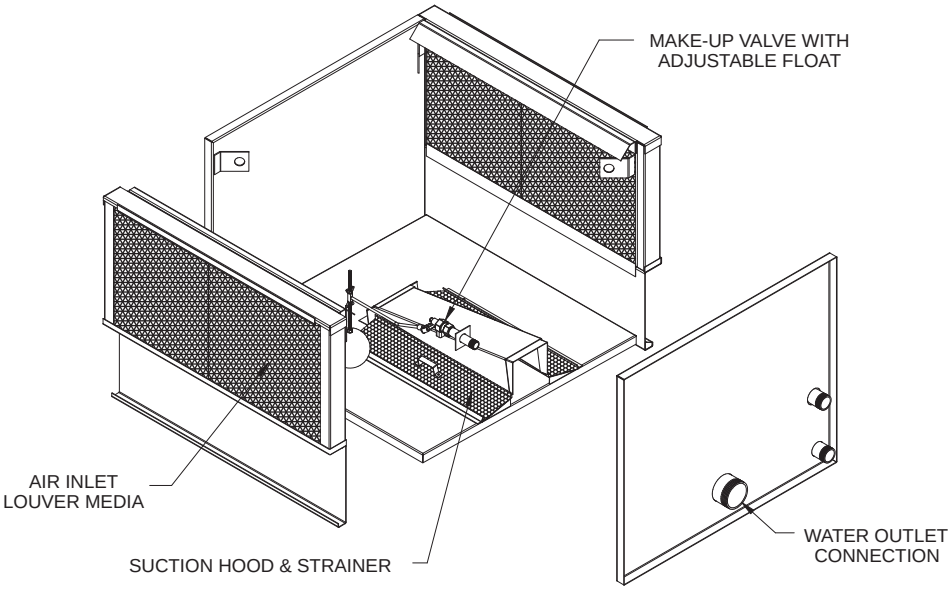

AT/USS 6', 7.5', 8' & 8.5' Wide (per cell) Towers – Side Connection

FAN & FILL CASING SECTION

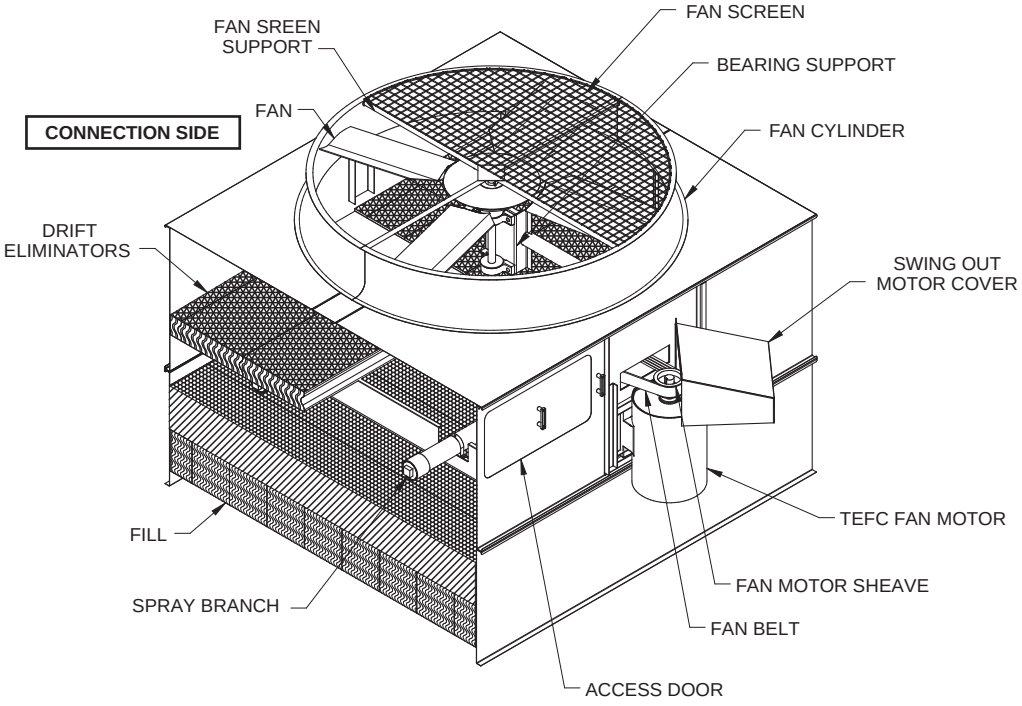

PAN & PLENUM SECTION

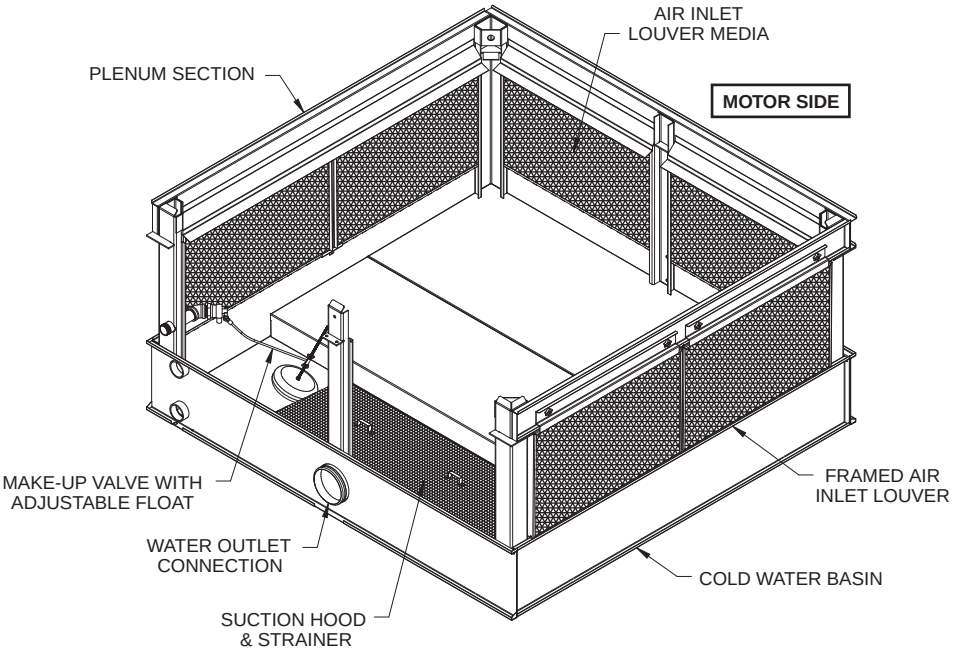

AT/USS 6', 7.5', 8' & 8.5' Wide (per cell) Towers – End Connection

FAN & FILL CASING SECTION

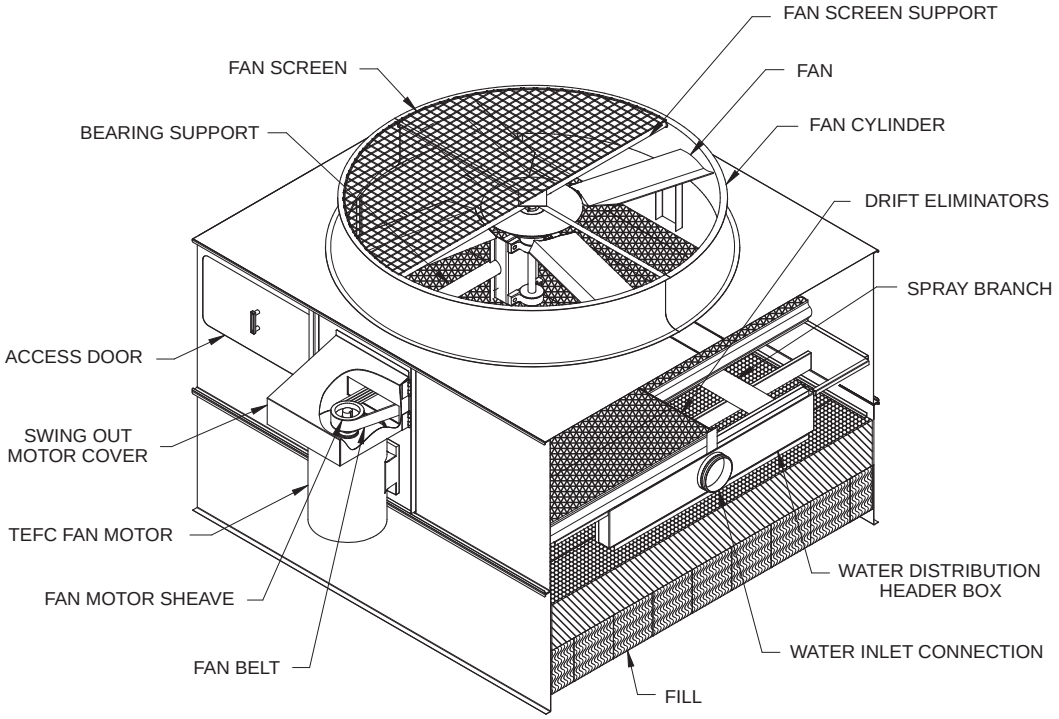

PAN & PLENUM SECTION

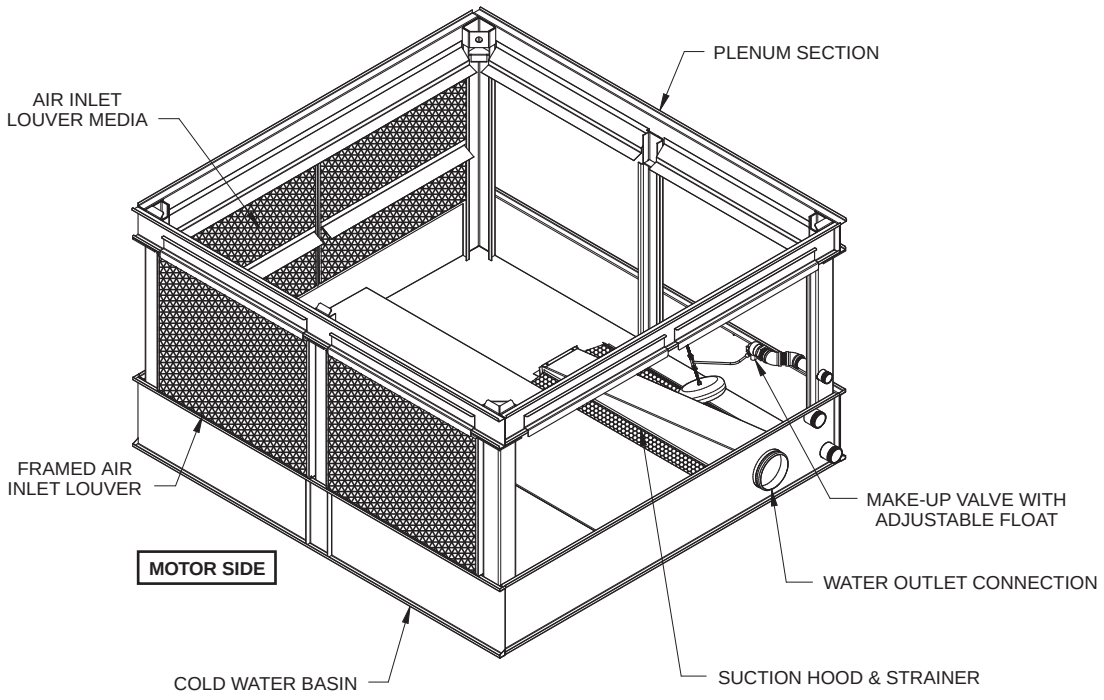

AT/USS 7' Wide (per cell) Towers – End Connection

FAN & FILL CASING SECTION

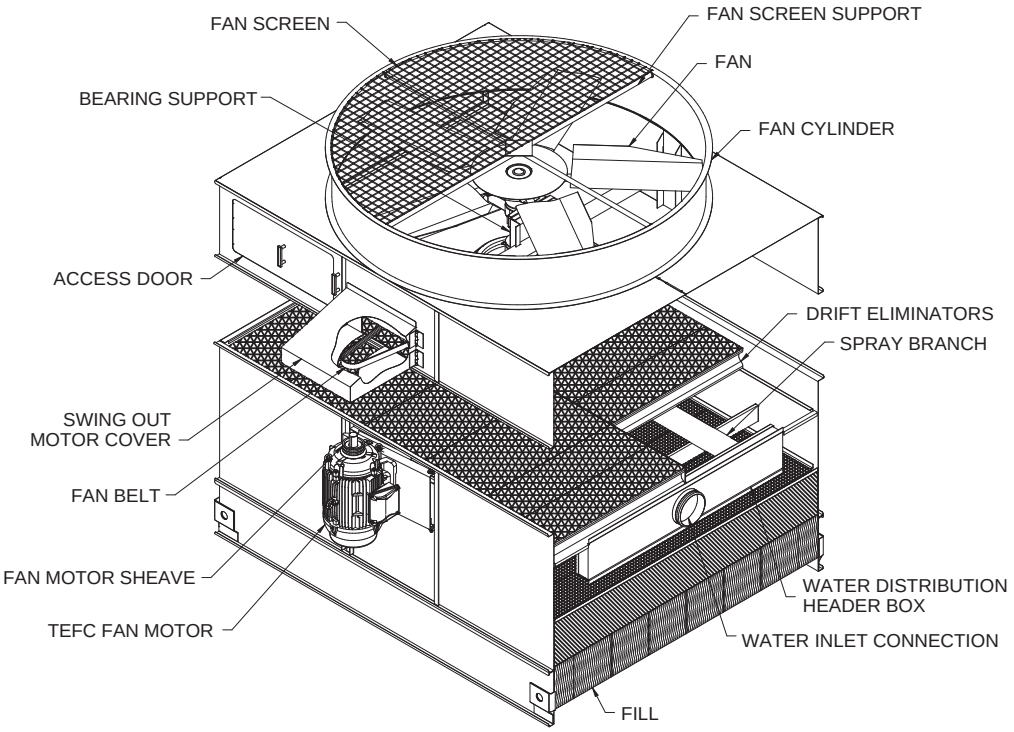

PAN & PLENUM SECTION

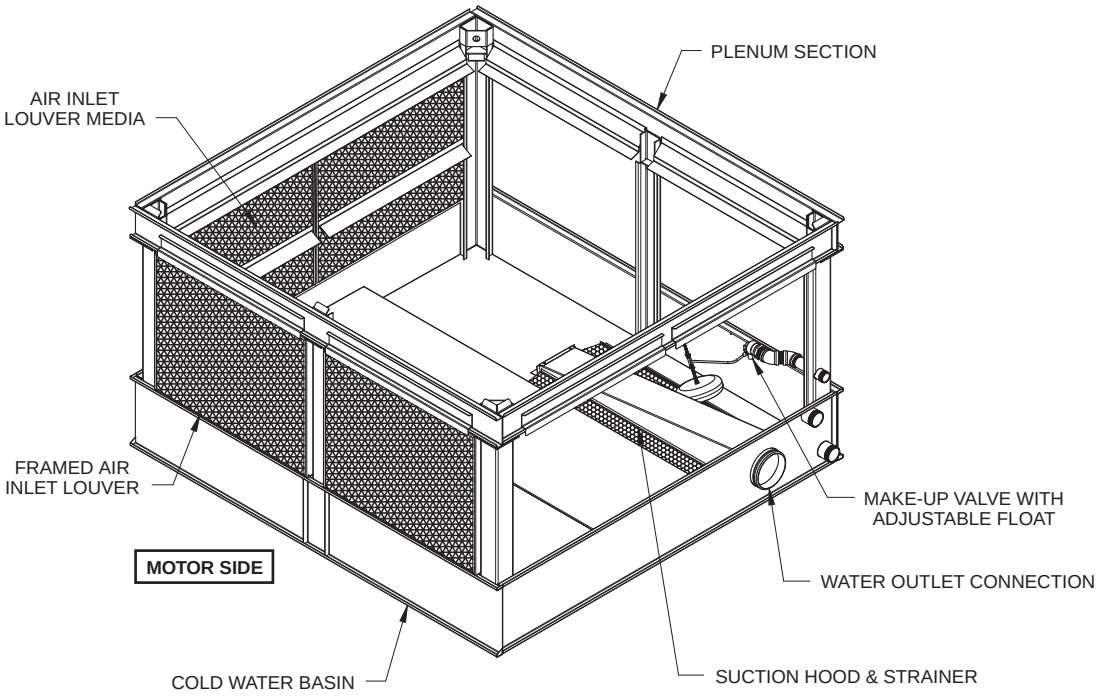

AT/USS 10', 12', & 14' Wide (per cell) Towers – Side Connection

FAN & FILL CASING SECTION

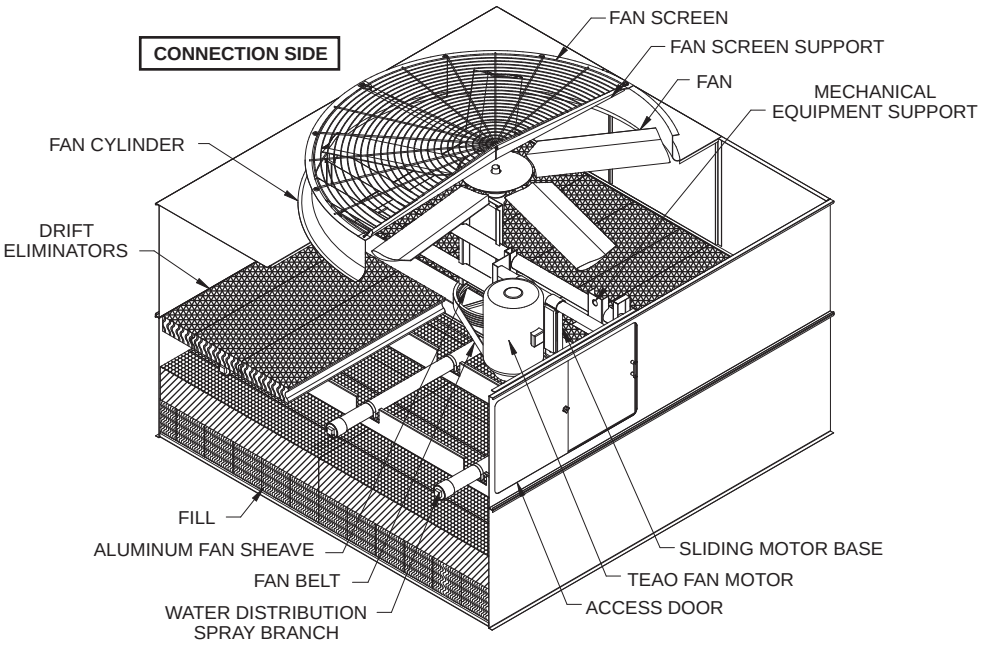

PAN & PLENUM SECTION

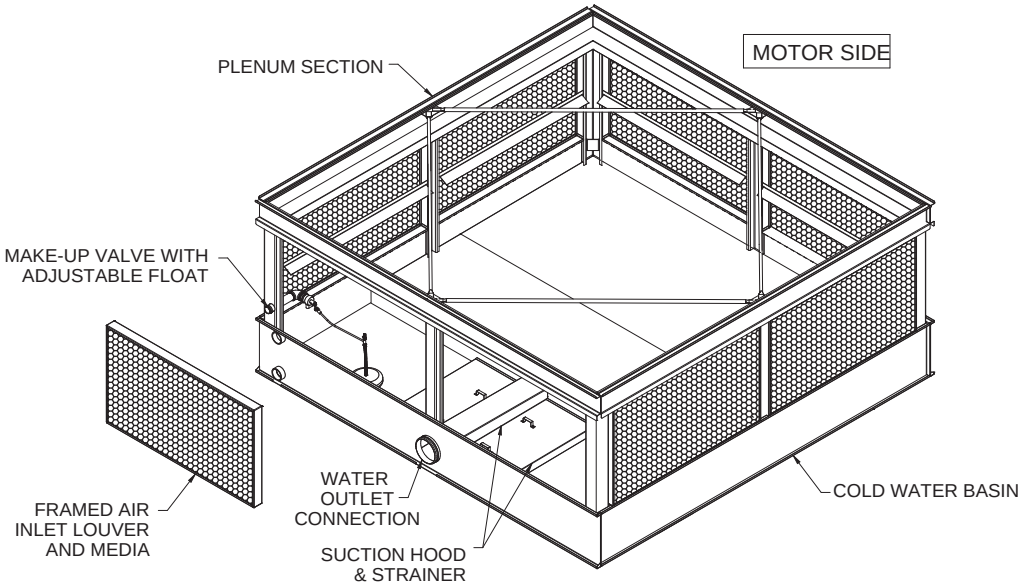

AT/USS 10’ & 12’ Wide (per cell) Towers – End Connection

FAN & FILL CASING SECTION

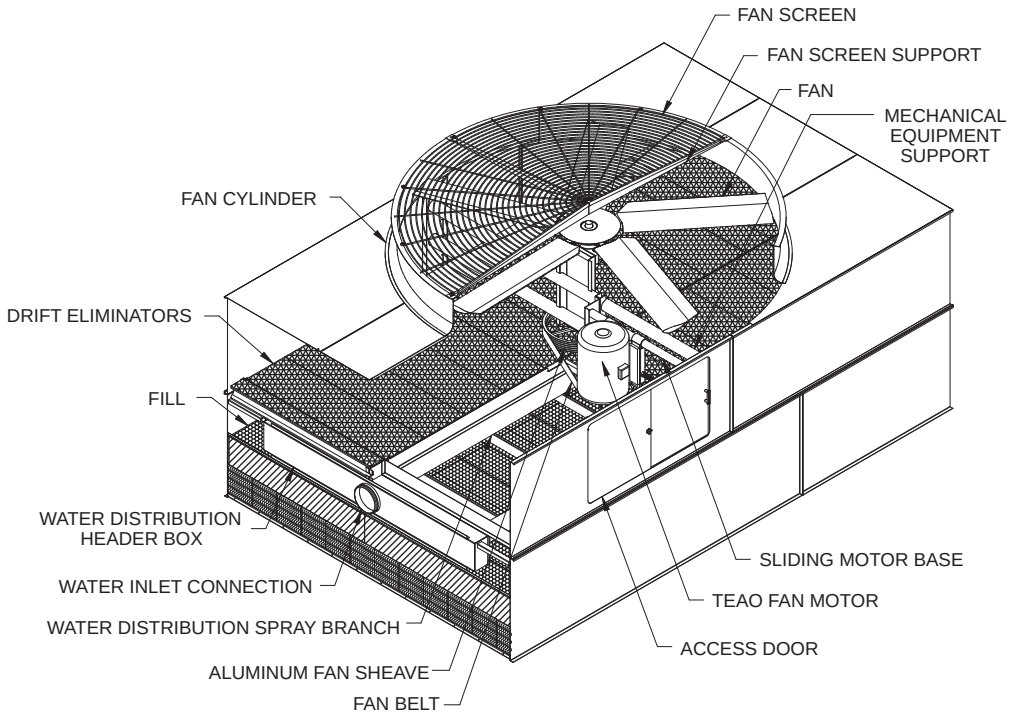

PAN & PLENUM SECTION

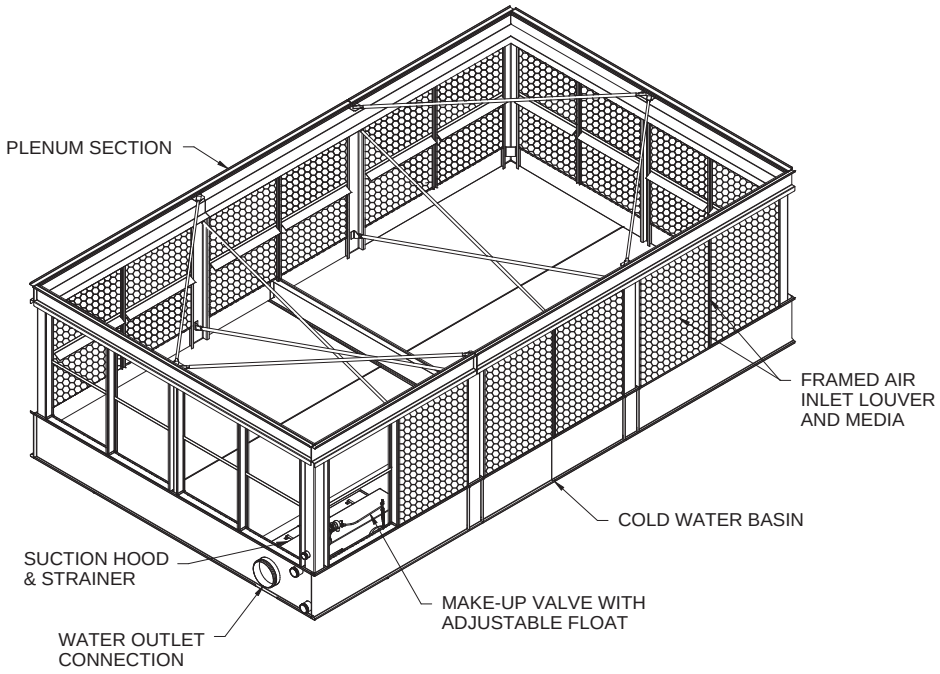

AT/USS 14’ x 24’ (per cell) Towers – Side Inlet Connection, End Outlet

FAN & FILL CASING SECTION

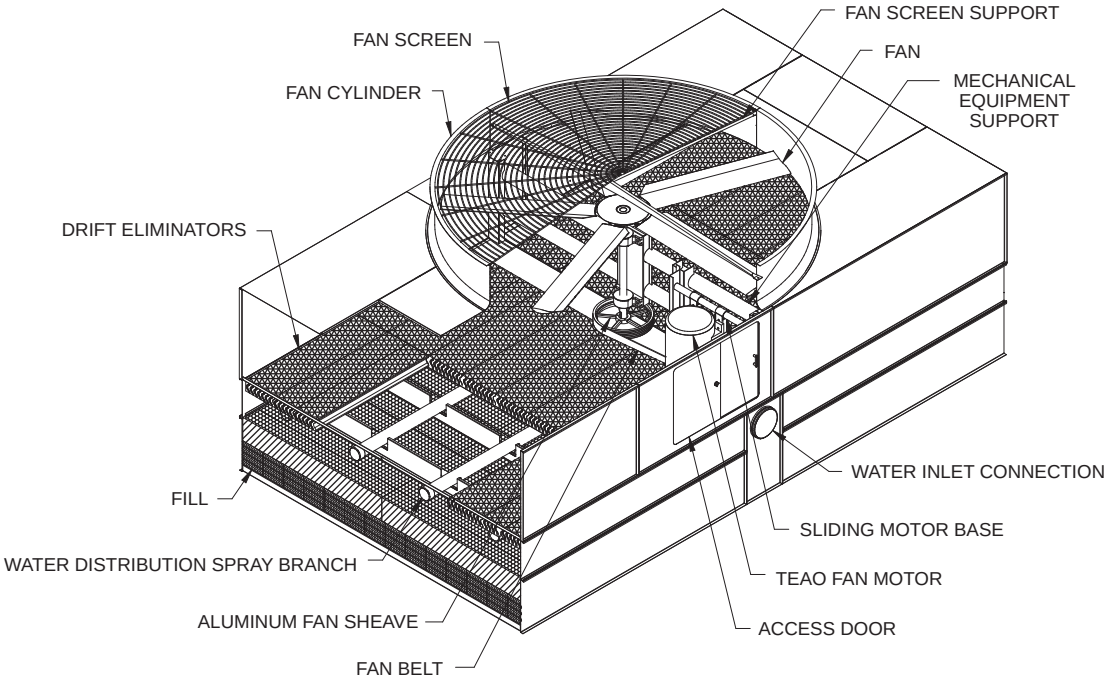

PAN & PLENUM SECTION

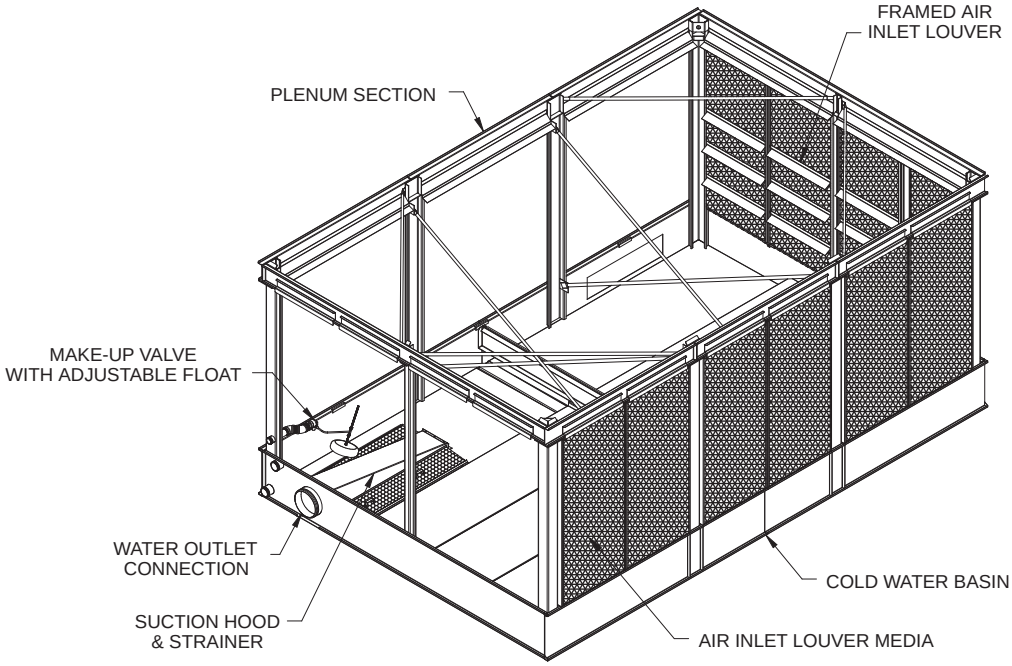

AT/USS 14’ x 26’ (per cell) Towers – End Connection

FAN & FILL CASING SECTION

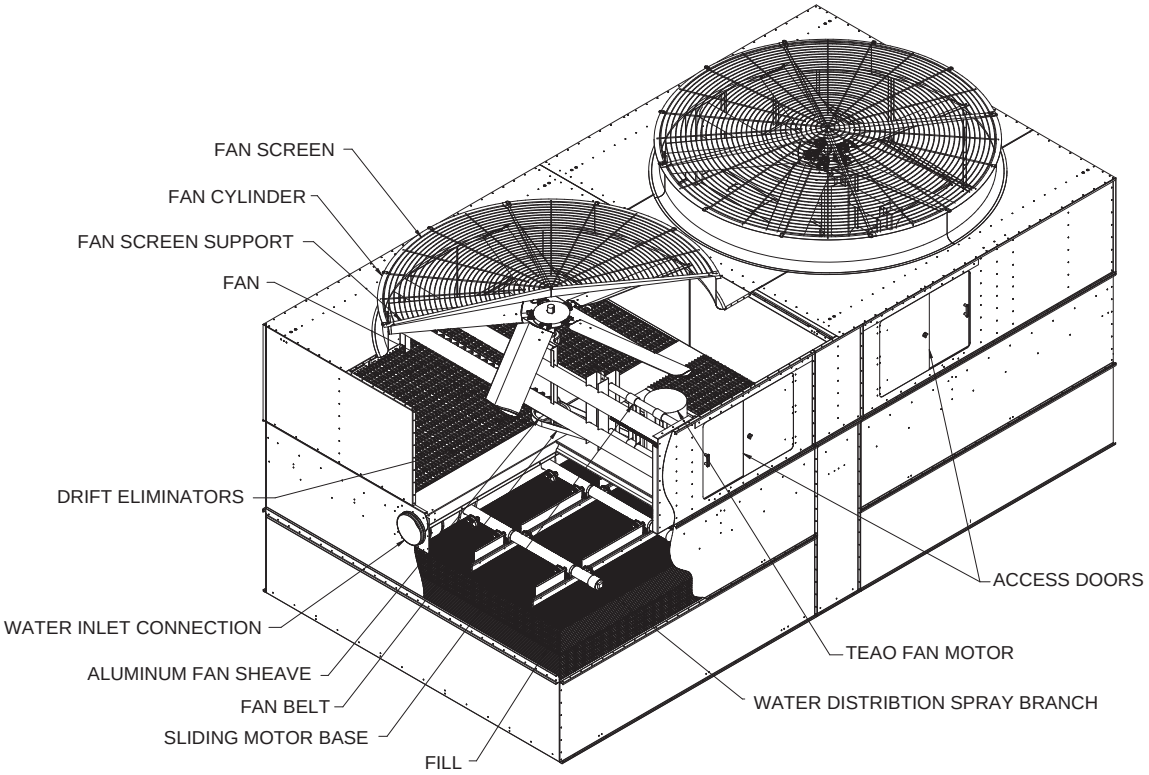

PAN & PLENUM SECTION

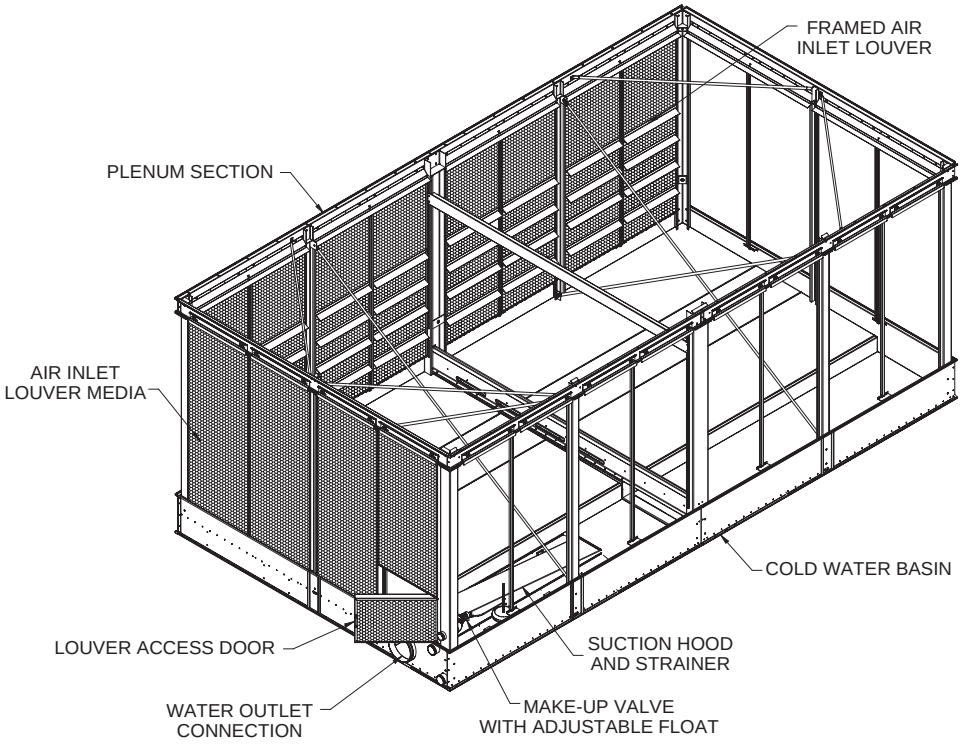

AT/USS 14’ x 26’ (per cell) Towers – Side Connection

FAN & FILL CASING SECTION

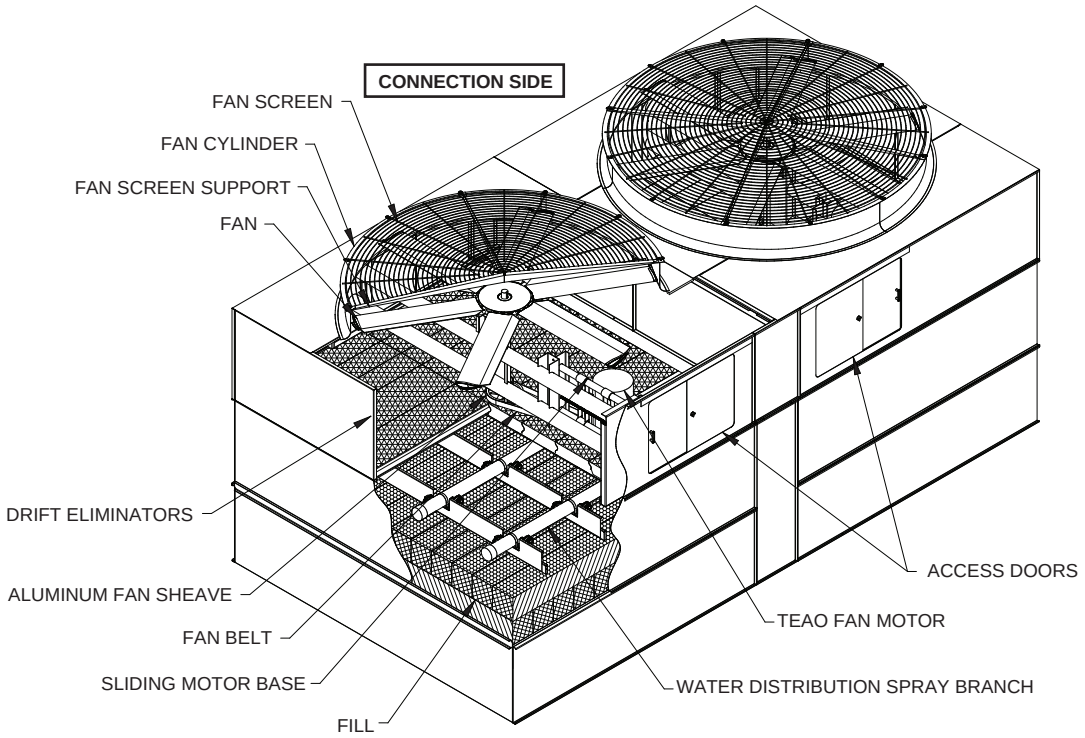

PAN & PLENUM SECTION

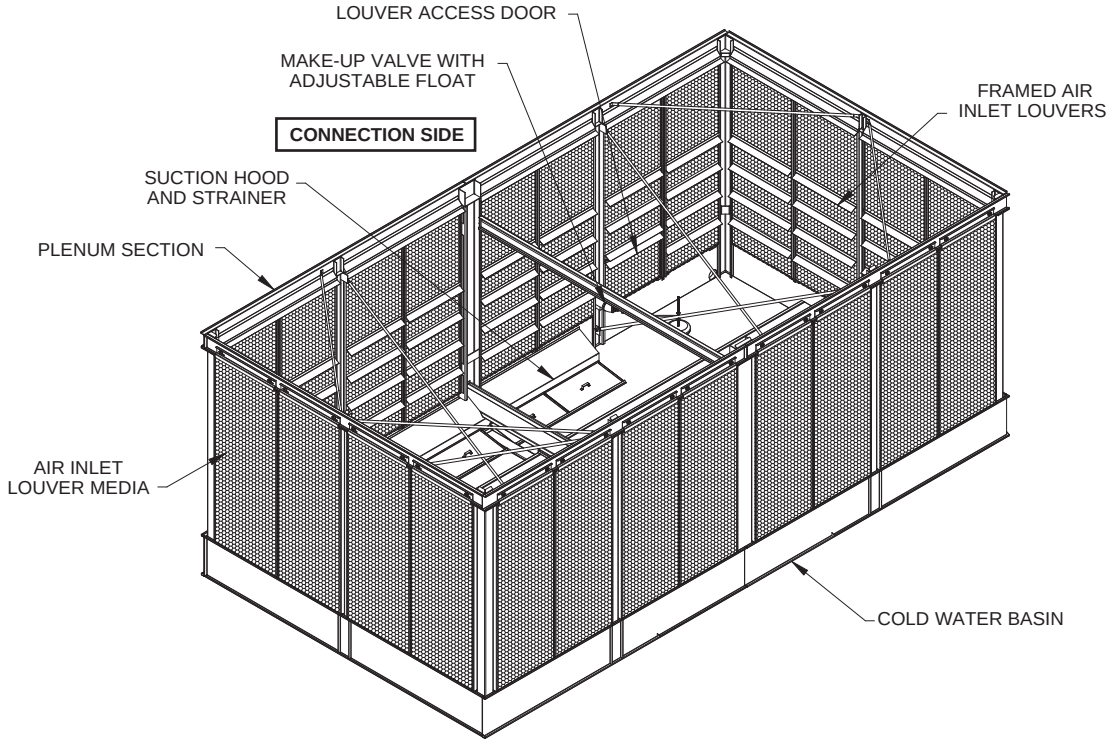

AT/USS 42’ x 26’ (three cell) Towers – Bottom Inlet Connection, Bottom Outlet

FAN & FILL CASING SECTION (ONE CELL SHOWN)

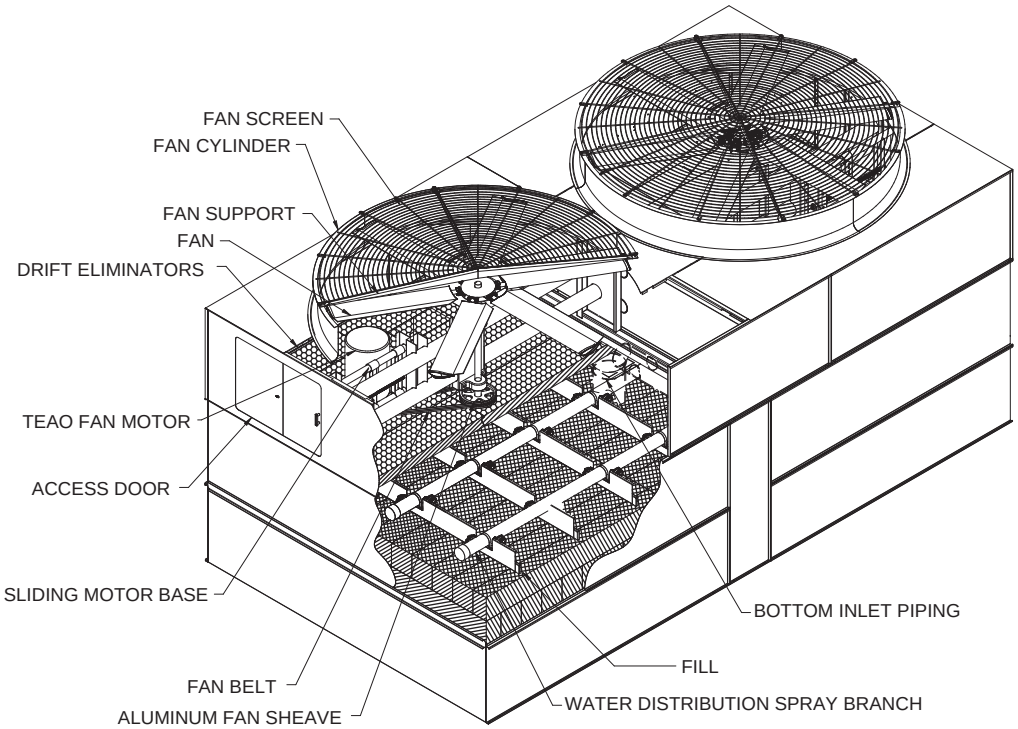

PAN & PLENUM SECTION (THREE CELLS SHOWN)

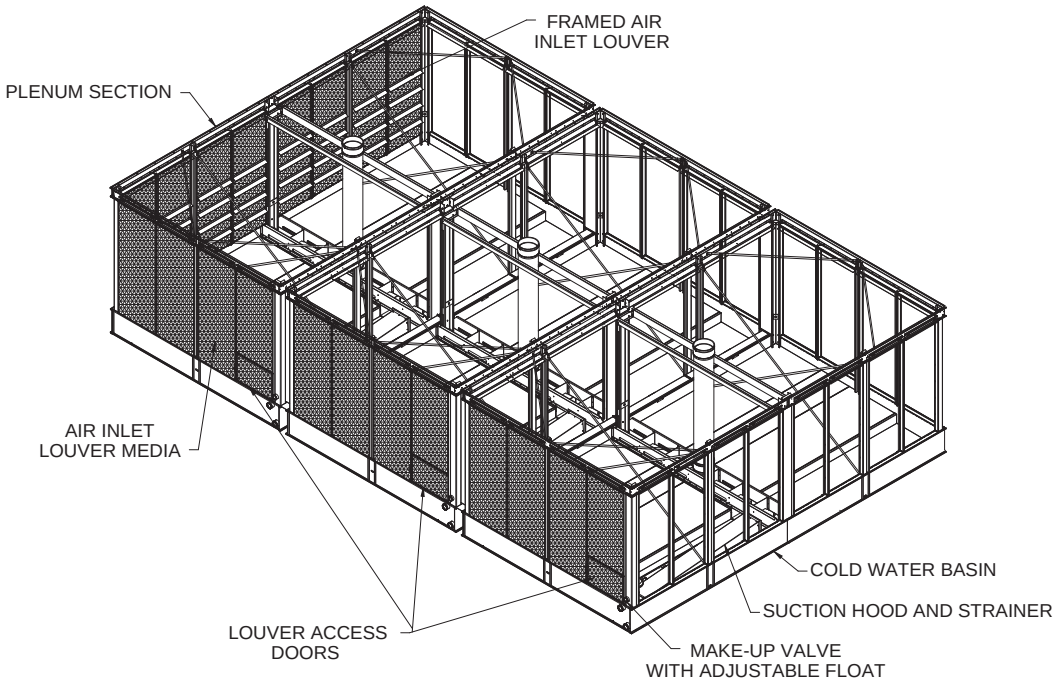

AT/USS 56’ x 26’ (four cell) Towers – Bottom Inlet Connection, Bottom Outlet

FAN & FILL CASING SECTION (ONE CELL SHOWN)

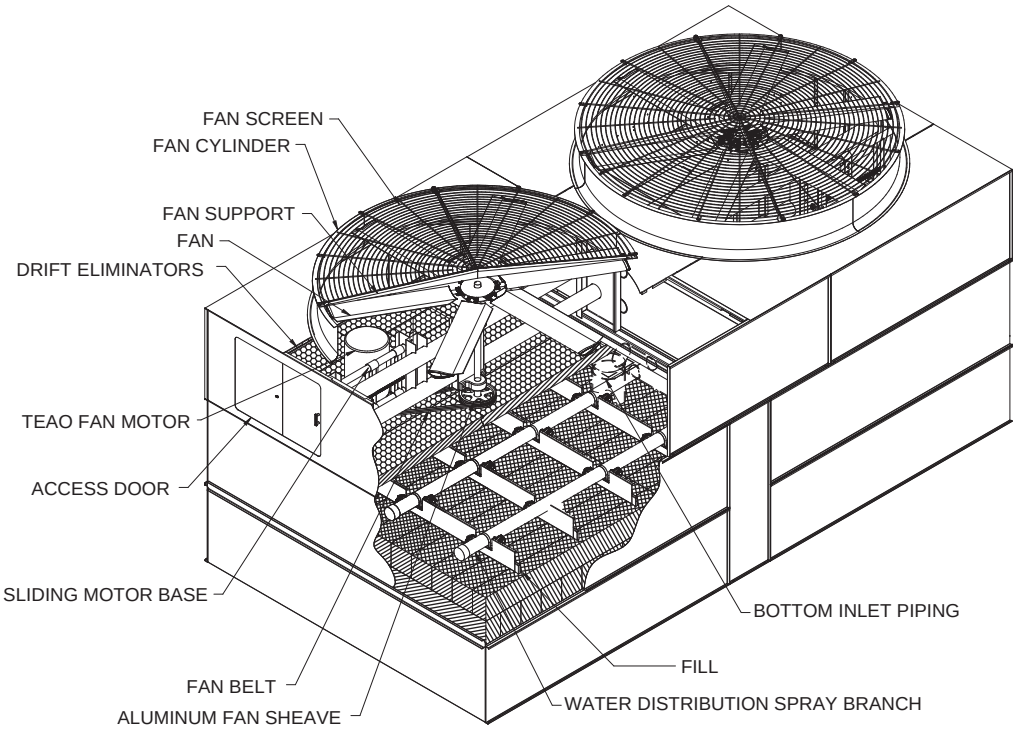

PAN & PLENUM SECTION (FOUR CELLS SHOWN)

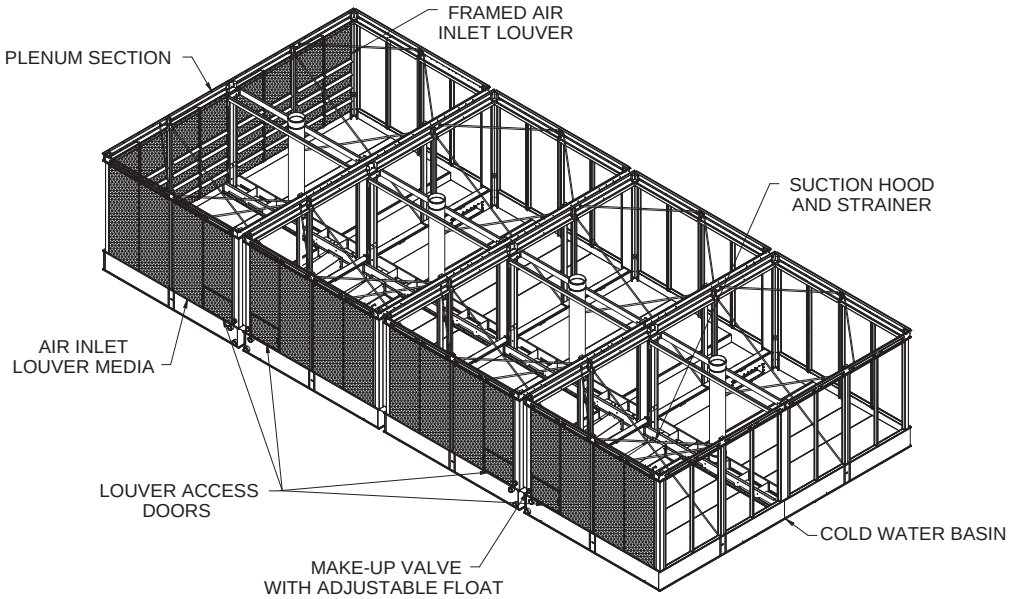

UT All Box Sizes (per cell) Towers - Side or End Connections

FAN & FILL CASING SECTION

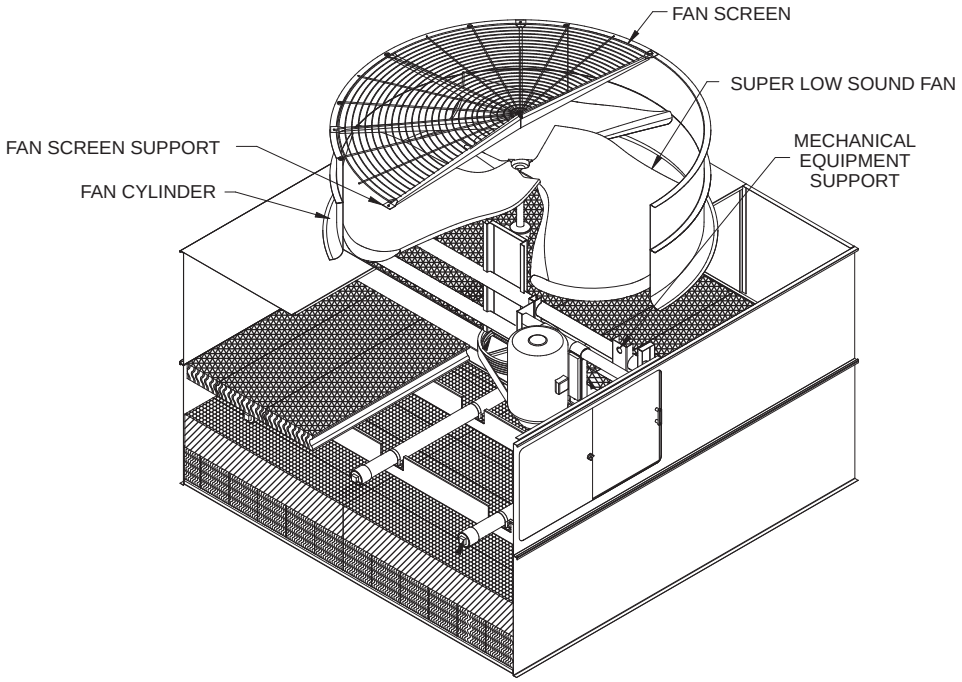

UT 12' Wide Unit with Side Connection Shown

NOTE:

- UT is the model number designation provided to an AT unit when Super Low Sound Fan is provided.
- Super Low Sound Fans have a taller profile than standard fans and therefore require taller fan cylinders - to review height add, please refer to the AT/UT/USS Cooling Towers Catalog.

AT Atlas

FAN & FILL CASING SECTION (ONE CELL SHOWN)

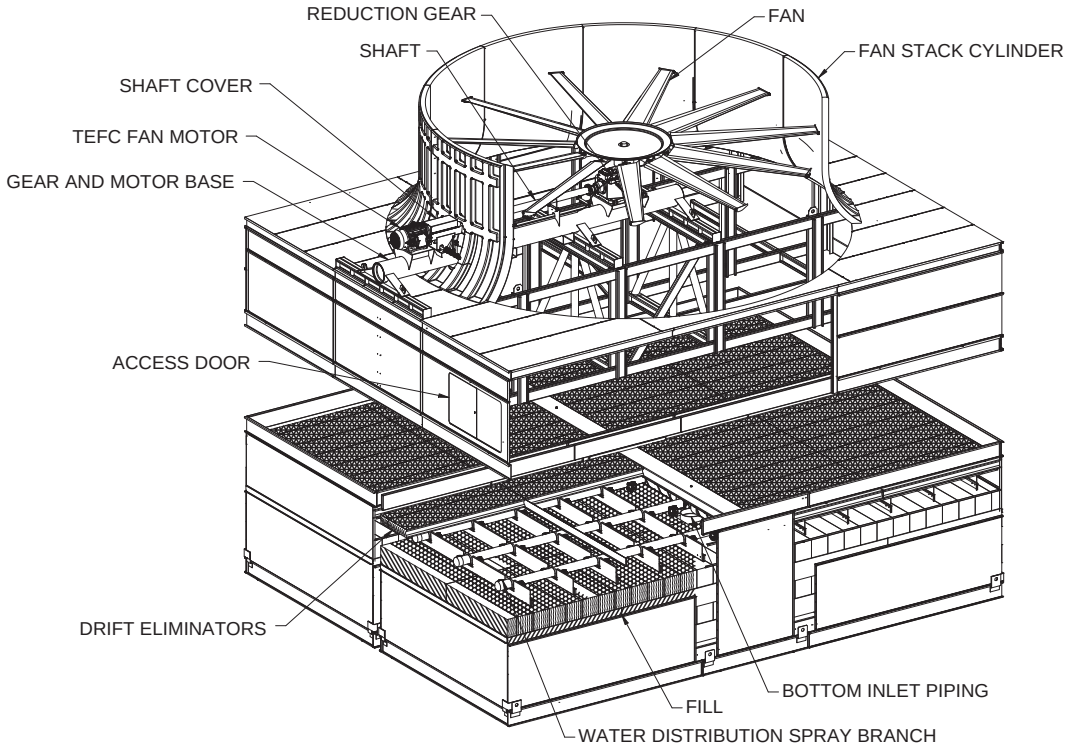

PAN & PLENUM SECTION (ONE CELL SHOWN)

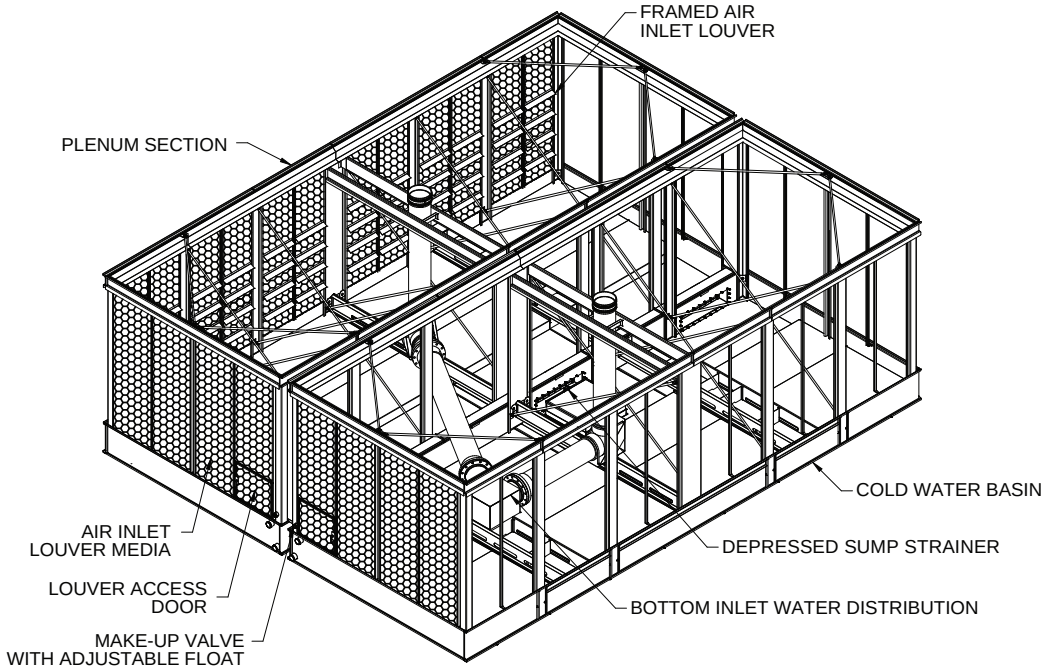

AXS Towers

SINGLE STACK

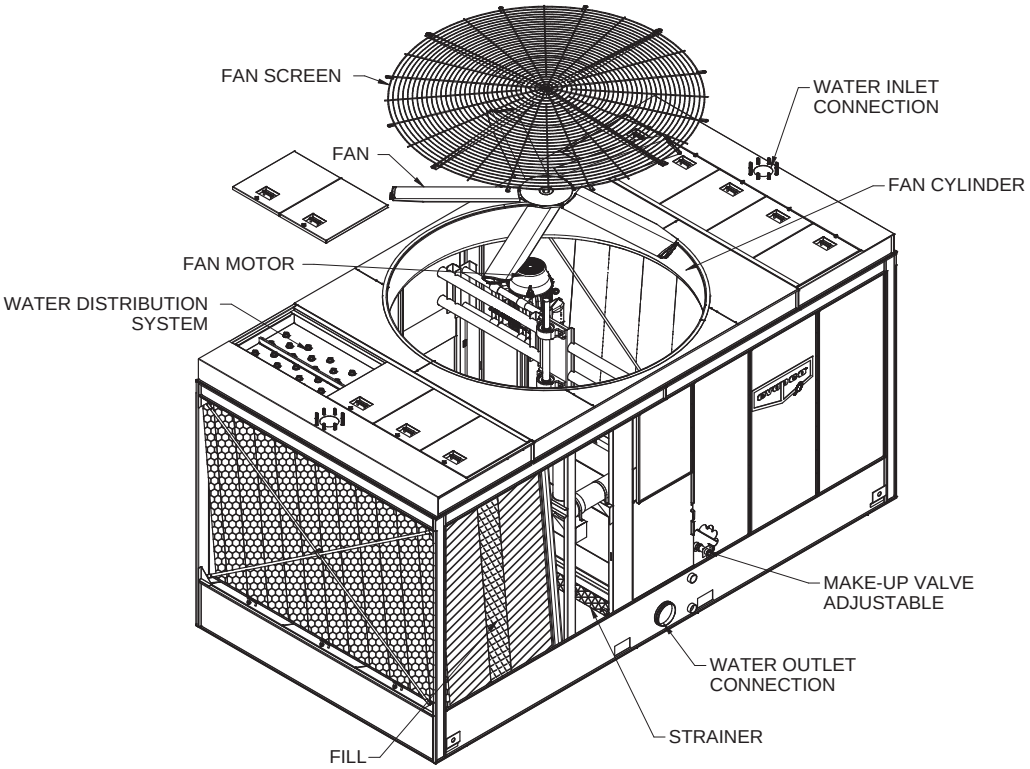

DOUBLE STACK

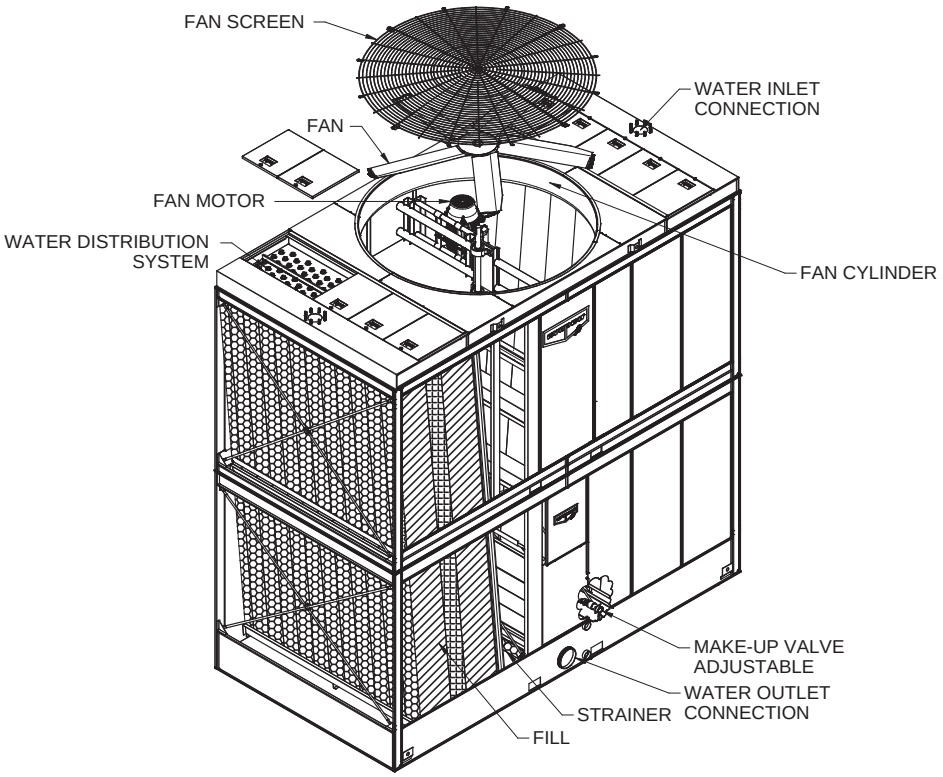

AXS Towers All Box Sizes - Units with Super Low Sound Fans

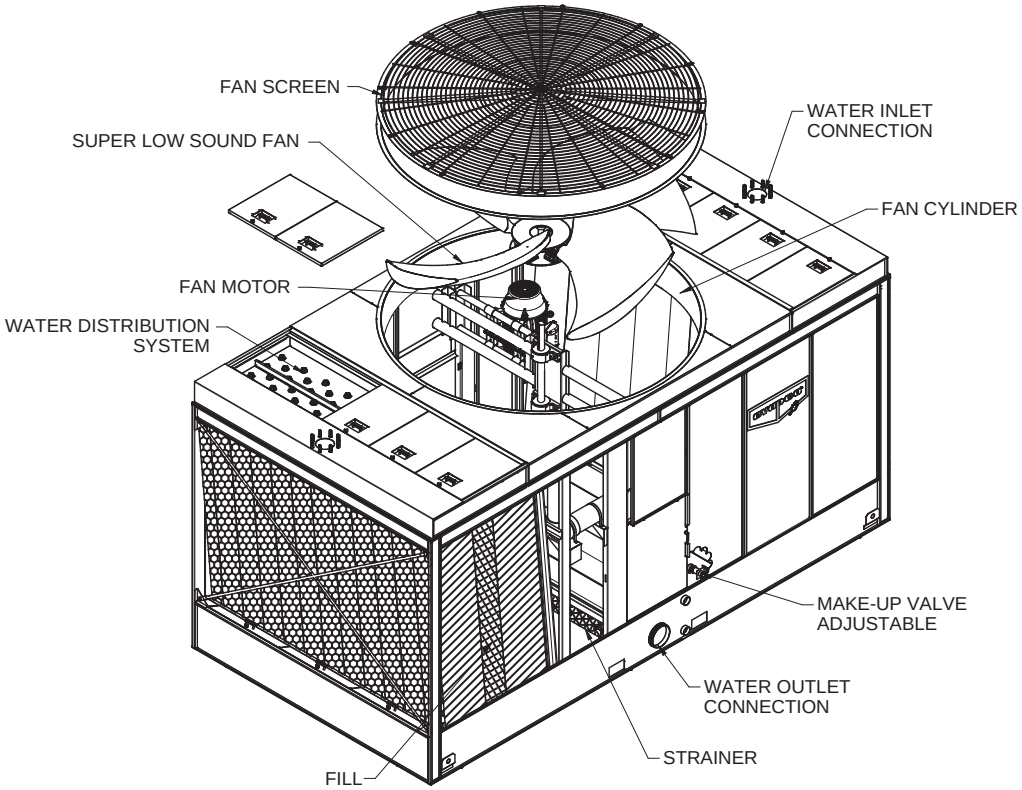

12' Wide Single Stack AXS Unit Shown

NOTES:

- Unlike AT units, when a Super Low Sound Fan is added to an AXS unit, the nomenclature does not change.
- Super Low Sound Fans have a taller profile than standard fans and therefore require taller fan cylinders.

SUN 8.5' Wide Towers

FAN & FILL CASING SECTION

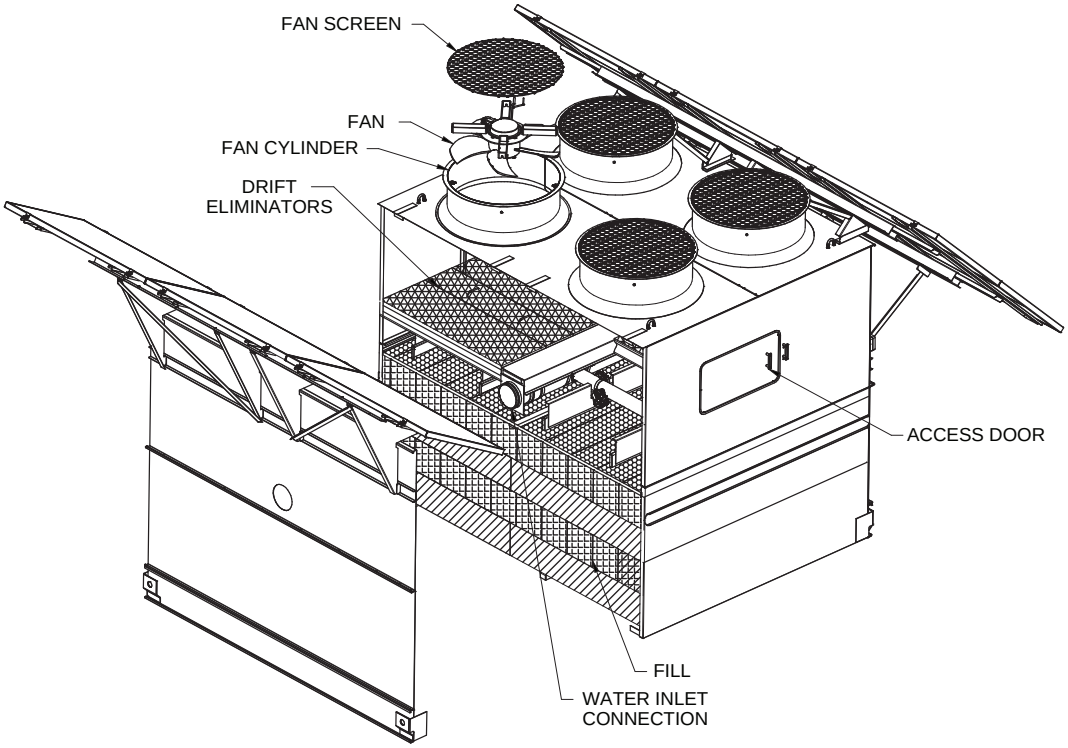

PAN SECTION

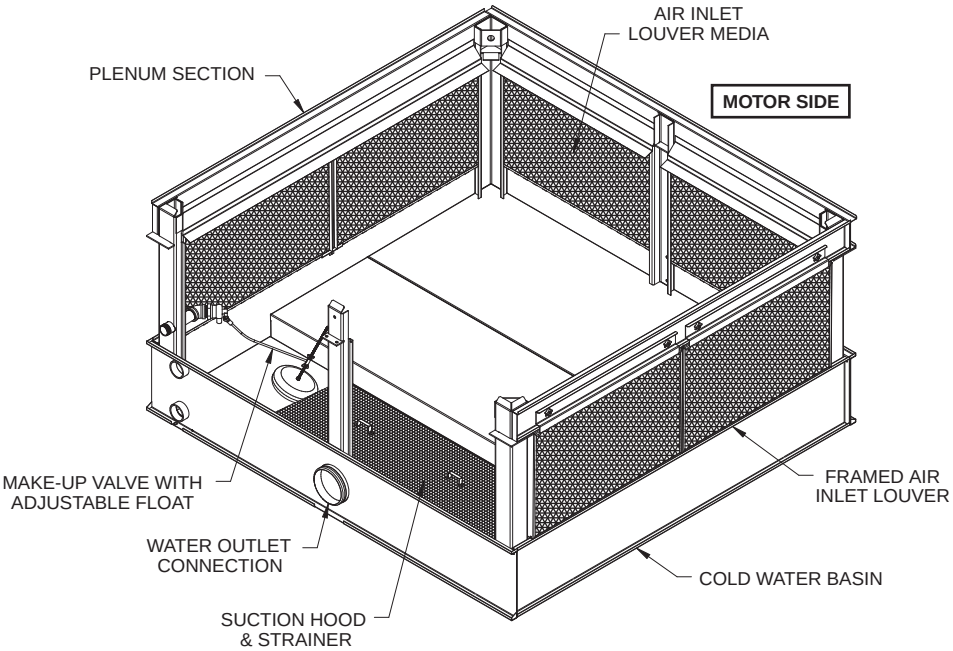

SUN 12’ Wide Towers

FAN & FILL CASING SECTION

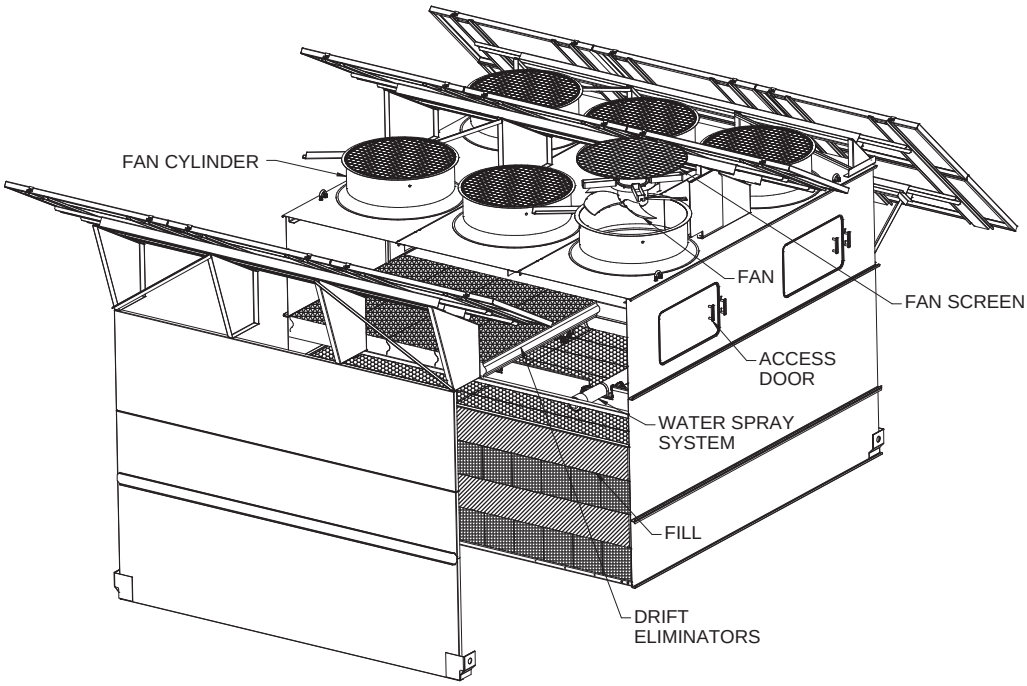

PAN & PLENUM SECTION

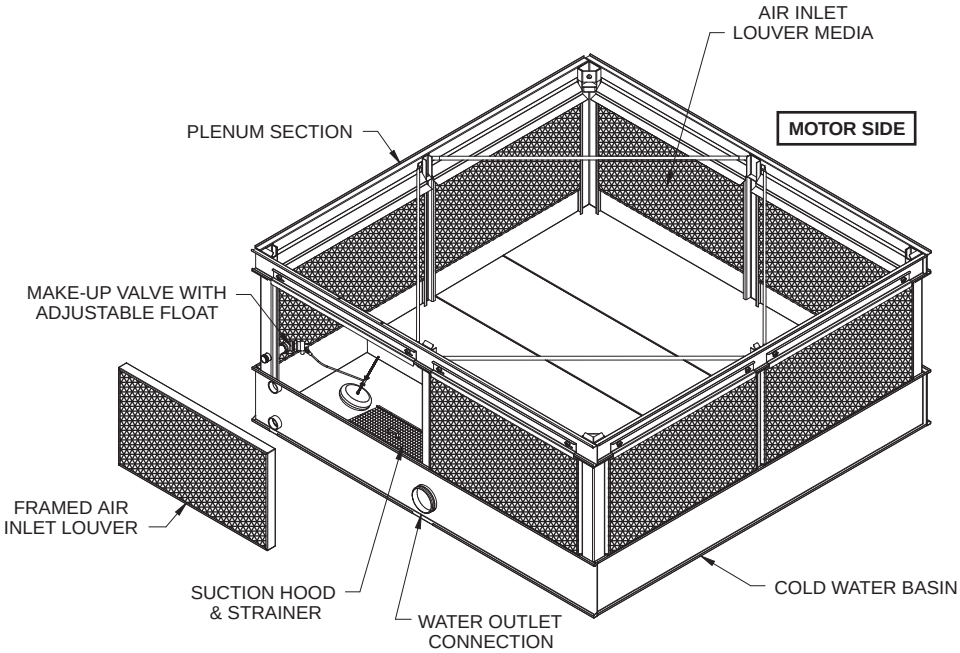

LPT Towers

FILL CASING SECTION

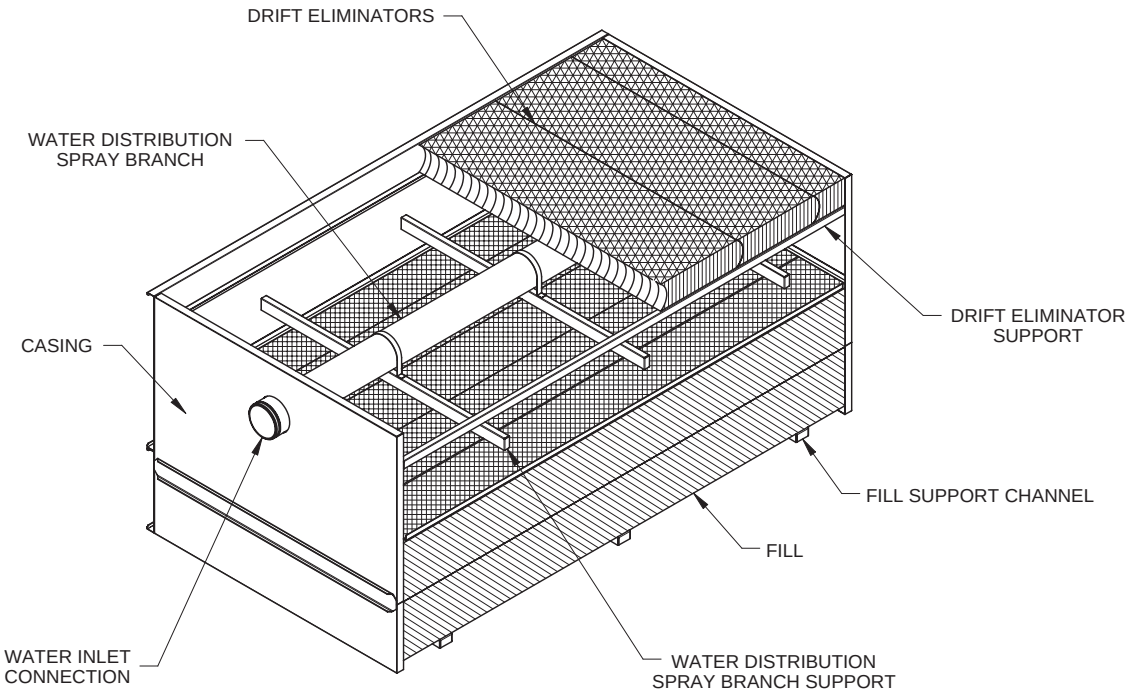

PAN SECTION

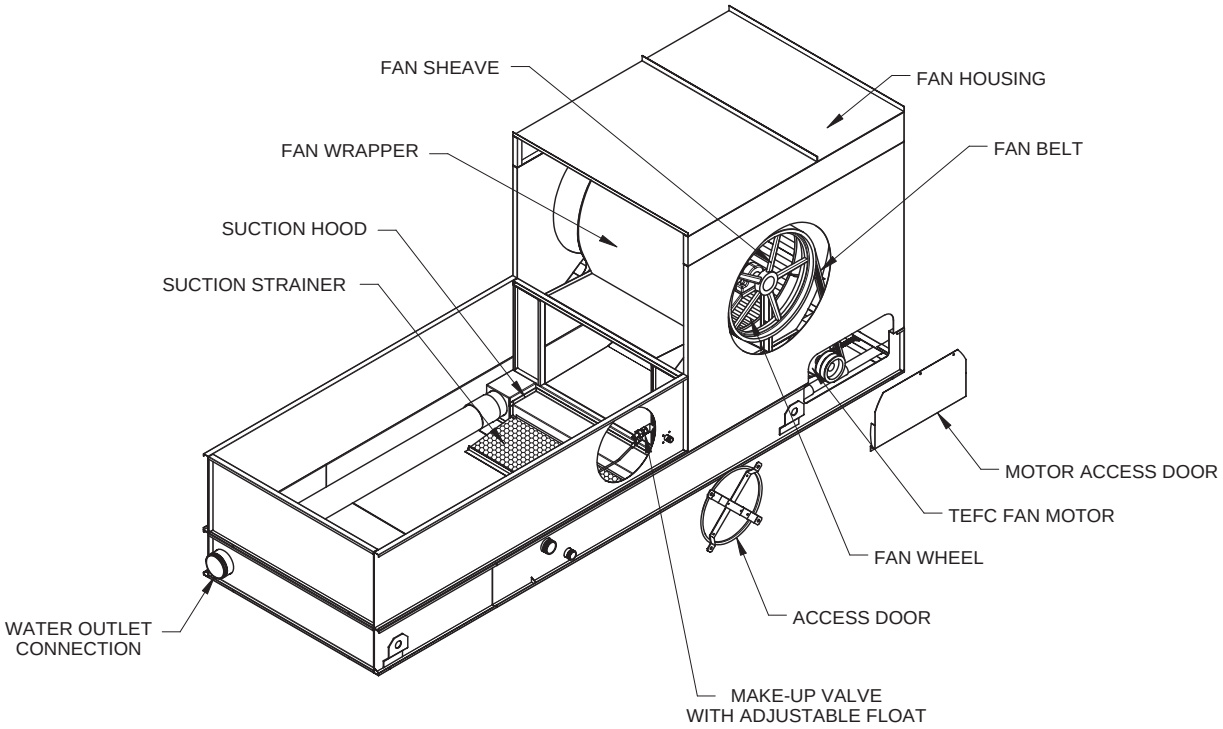

LSTE – 4’ & 5’ Wide Towers

FILL CASING SECTION

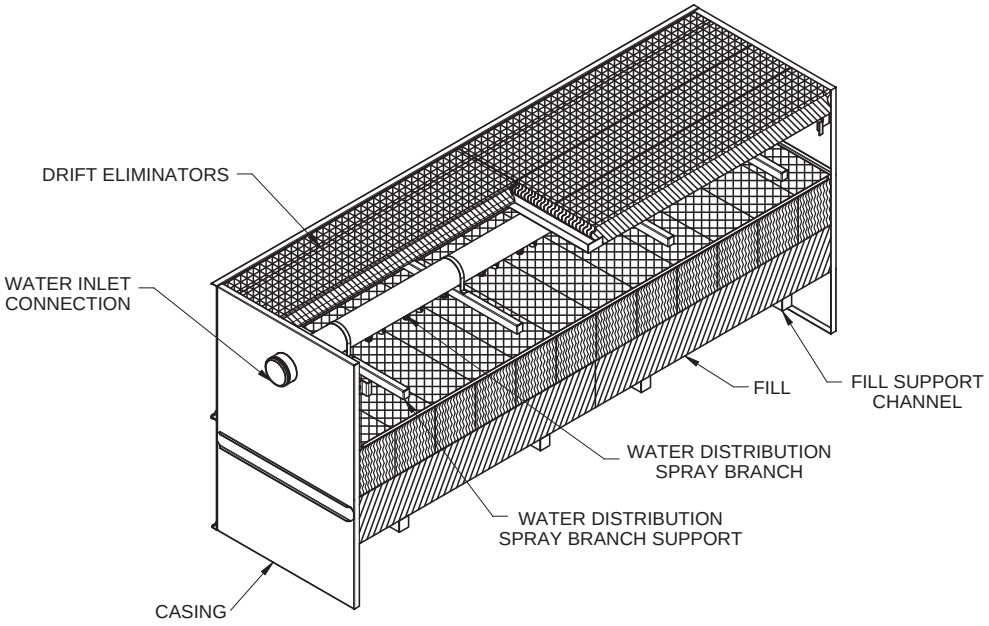

PAN SECTION

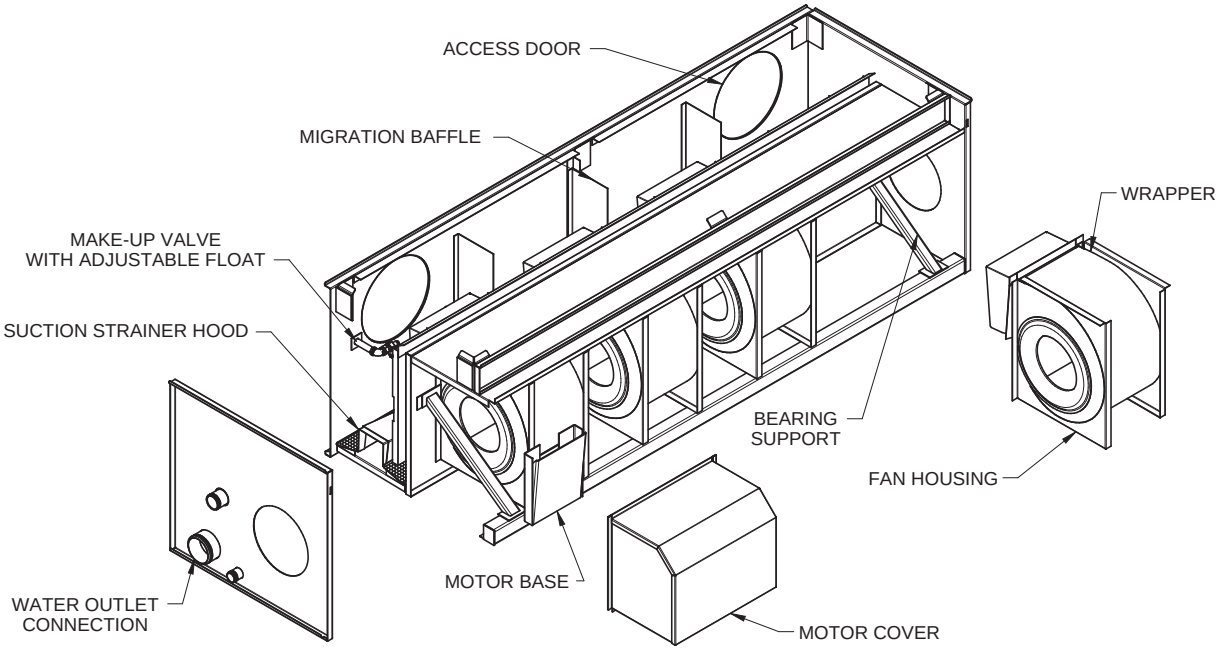

LSTE 8' & 10' Wide Towers

FILL CASING SECTION

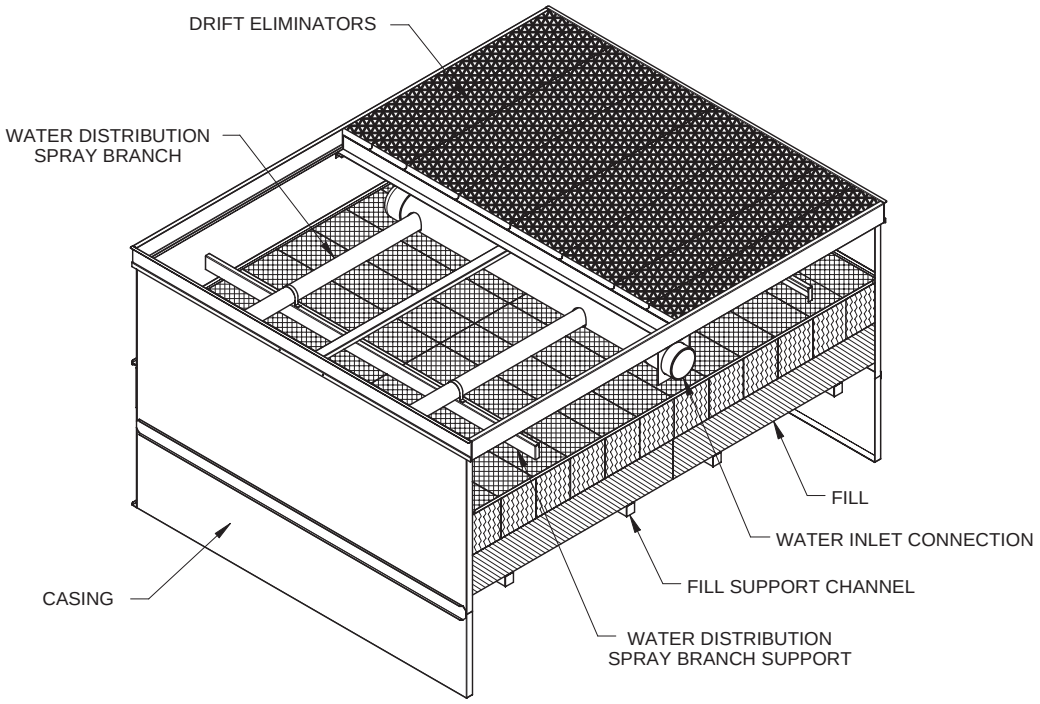

PAN SECTION

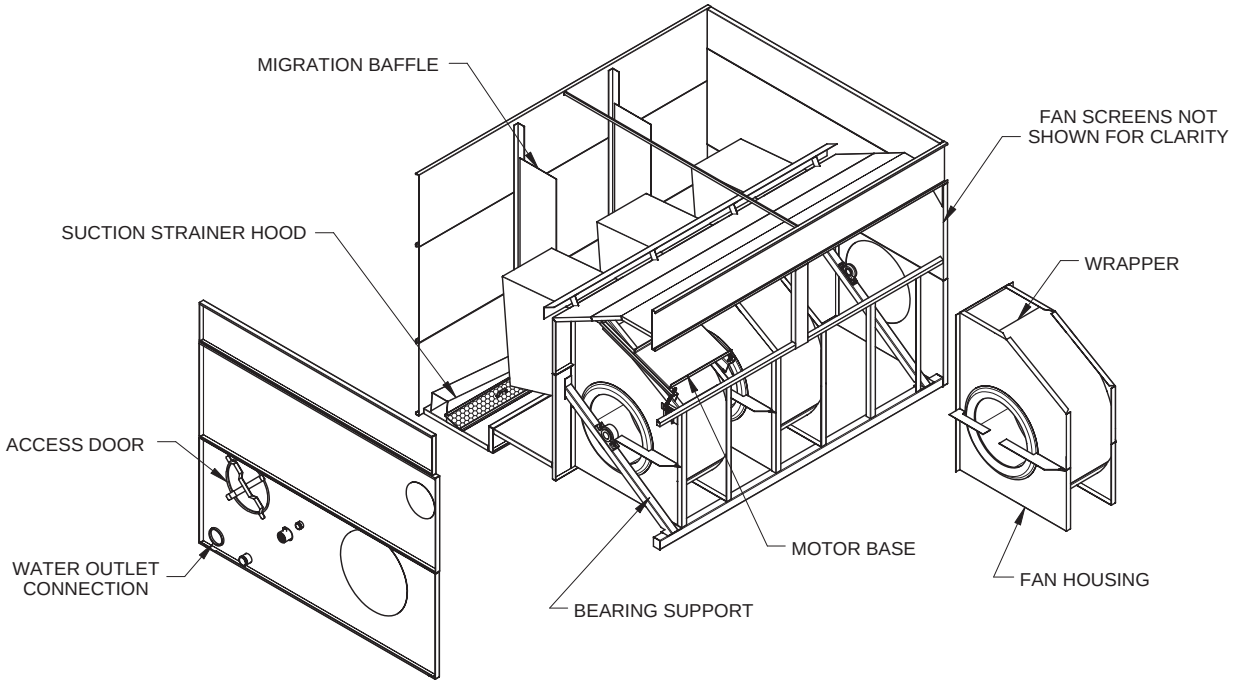

NOTES:

TWR19OM

RECYCLED
Paper made from recycled material
FSC® C017250
www.fsc.org

EVAPCO, Inc. • P.O. Box 1300 • Westminster, MD 21158 USA
PHONE: 410-756-2600 • FAX: 410-756-6450 • E-MAIL: marketing@evapco.com

©2019 EVAPCO, Inc.

Printed on recycled paper using soy-based ink

1500/7-19/YGS