evapco for LIFE

Operation and Maintenance Instructions

For EVAPCO Evaporators

GLOBAL COLD CHAIN ALLIANCE®

iiar International Institute of Ammonia Refrigeration MEMBER

AHRI AIR-CONDITIONING, HEATING, & REFRIGERATION INSTITUTE

Table of Contents

3 Introduction

3 General Evaporator Information

- 3 Evaporator Product Lines
- 3 Safety Information

4 Installation

- 4 Receiving & Inspection
- 4 Lifting & Handling Requirements
- 5 Layout
- 5 Storage
- 5 Piping

6 Electrical Requirements

- 6 General Requirements for Field Wiring
- 6 Fan Motor Wiring
- 6 Belt Driven Fan Units
- 7 VFD Operation
- 7 Recommended Practices for Evaporator Fan Motors Installed with VFDs
- 7 VFD Switching (Carrier) Frequency Setting
- 7 Lead Length Between VFD and Electric Motor
- 7 Wire Type / Wiring
- 8 Load-Side Reactor
- 8 DV/DT Type Filter
- 8 Sinus or Sine Wave Type Filter
- 8 Shaft Grounding Brushes or Rings

9 Startup & General Operation

- 9 General Operation Procedures and Checks

10 Maintenance

- 10 Routine Maintenance
- 10 Cleaning
- 13 Troubleshooting

14 Appendix

- 14 Rigging and Lifting Appendices

evapco for LIFE

Introduction

Congratulations on the purchase of your EVAPCO cooling unit! EVAPCO equipment is constructed of the highest quality materials and designed to provide years of reliable service when properly maintained. It is important to establish a regular maintenance program and be sure that the program is followed. This bulletin should be used as a guide to establish a program. A clean and properly serviced unit will provide a long service life and operate at peak efficiency. This bulletin includes recommended maintenance services for unit start up, unit operation and unit shutdown and the frequency of each. Please note: the recommendations of frequency of service are minimums.

Services should be performed more often when operating conditions necessitate. If you should require any additional information about the operation or maintenance of this equipment, contact your local EVAPCO representative. You may also visit www.evapco.com for more information.

Read the following instructions carefully before attempting to rig or install EVAPCO evaporator units. Also thoroughly review the Safety Information noted below.

If you should require any additional information about the operation or maintenance of this equipment, contact your local EVAPCO representative. You may also visit www.evapco.com for more information.

General Evaporator Information

Evaporator Product Lines

- This installation, operation, and maintenance manual applies to all EVAPCO SST Evaporator standard product families and previous stainless steel tube evaporator product lines. This includes but is not limited to the SSTM, SSTX, SSTE, SSTL, SSTH, SSTD, SSTW, and all EJET product families. Additionally, this manual is applicable to EVAPCO custom Evaporators, designated by "TFC" nomenclature.
- Evaporator models that start with "TFC" in the model number nomenclature indicate that the model is a custom unit and deviates from the SST standard model product catalog. Much of the information in this bulletin applies to "TFC" models in general, however, unit specific information such as hanger locations and lifting points may not follow the standard products shown in this bulletin. For "TFC" model specific information, please refer to the unit certified drawing, or consult the factory for additional assistance.

Safety Information

Caution must be employed when people or product may be exposed to refrigerants. Frequent visual inspections and continuous system monitoring are recommended for detecting defects and malfunctions which may result in the release of refrigerant, as this may be harmful to people, product or equipment. Electronic refrigerant detection devices should be used for sensing refrigerant vapors in the atmosphere. Please refer to IIAR Refrigeration codes for guidance on proper sensing and ventilation requirements for your facility/system. Only qualified and experienced personnel should service, operate and maintain refrigeration equipment.

Specific precautions must be taken to avoid hydraulic shock, liquid hammer, and thermal expansion. Hydraulic shock and hammer affect hot-gas defrost piping most often and are the result of a sudden change in velocity of a liquid slug. If this change is large enough, the energy dissipated can be sufficient to break coil header caps, plugs and piping elbows. Hydraulic thermal expansion (lock-up) may occur when the ambient temperature rises and causes the liquid in a vapor-free section of trapped piping to expand. The pressure created during this expansion can be great enough to rupture the associated piping and valves. For all hot-gas defrost applications, the units should never be operated without a check valve or similar device that prevents liquid refrigerant from accumulating in the hot-gas coil(s) in the drain pan. For more information on this subject, see the latest revision of IIAR 2 or ASHRAE Standard 15. If isolating an evaporator, remove liquid refrigerant from the coils or section to be isolated before hand valves are closed in order to protect equipment, product and personnel. Pump liquid out of piping so that it cannot cause hydraulic shock, hammer or thermal expansion (lock-up). Refrigerants and feed types MUST NOT differ from that which is indicated on the factory certified drawing as this may result in property damage or injury. Likewise, the units must never be subjected to pressures exceeding the nameplate design pressure. All refrigerant piping systems must be properly evacuated to remove non-condensables and moisture prior to charging with refrigerant.

Qualified personnel should use proper care, procedures and tools when operating, maintaining or repairing this equipment in order to prevent personal injury and/or property damage. The warnings listed below are to be used as guidelines only.

This equipment should never be operated without fan screens and access doors properly secured and in place.

A lockable disconnect switch should be located within sight of the unit for each fan motor associated with this equipment before performing any type of service or inspection of the unit make certain that all power has been disconnected and locked in the "OFF" position.

Installation

Receiving & Inspection

- Carefully inspect all units upon arrival to ensure that no damage has occurred during shipment. Inspection of the unit should be thorough, including searching for dirt and debris caused by shipping as well as inspecting all components and accessories for physical damage. If damage is observed upon delivery inspection, please immediately notify the freight carrier of the damage. To assist with claims, EVAPCO takes photos of equipment prior to leaving the shop as a standard QA practice to help minimize disputes regarding damage thought to be caused in transit.
- If damage is observed upon delivery inspection, please immediately notify the freight carrier of the damage. To assist with claims, EVAPCO takes photos of equipment prior to leaving the shop as a standard QA practice to help minimize disputes regarding damage thought to be caused in transit. If damage is observed it is suggested to document with photos and detailed descriptions, and any equipment returned to EVAPCO must be done so with prior factory approval.
- The refrigerant coils on all EVAPCO Evaporators are shipped from the factory with a low-pressure nitrogen charge of 15 psig (+/- 3 psi) as standard. Upon receipt, it is good practice to ensure that coil(s) are holding nitrogen charge, and that the nitrogen charge be maintained unless connecting the evaporator to the refrigeration system piping. To confirm this nitrogen charge, verify that the factory supplied pressure gauge is showing 12-18 psig. A coil without the factory nitrogen charge may have been damaged during shipment, or in rare cases the valve holding the nitrogen charge failed. In these cases, the coil should be pressure tested with dry nitrogen gas to ensure that it is leak free prior to installation. Please notify your EVAPCO representative before installing any evaporator that has lost the factory nitrogen charge during shipment.
- If Evaporators were ordered with the optional shrink wrap accessory, carefully unwrap the equipment prior to performing the visual inspection and cleaning. Shrink wrap is intended to minimize the equipment from accumulating dirt during transit, but inspection and cleaning is still recommended upon delivery.

NOTES: In addition to shipping with a nitrogen charge, EVAPCO typically ships evaporators with "shipping legs" which are intended to be removed after rigging/installation. Common practice is to hang the equipment with the shipping legs attached and remove them once the unit is in place.

Lifting & Handling Requirements

- All evaporator models covered in this manual are designed to be removed from the truck by forklift or crane. Please refer to the appendix for detailed information pertaining to each specific unit. Always use extreme care when employing a forklift to remove the units from a truck. The forks must be placed properly as shown in the appendix and not make contact with the unit itself. Standard evaporator models have forklift channels, and custom units/bare coils may be skidded. Be sure to follow standard industry forklift guidelines for proper load securing and lifting procedures. When using a crane, lift the units ONLY by the lifting/mounting brackets as shown in the appendix and be sure to lift the units in an even and balanced manner.

REFER TO THE APPENDIX FOR EACH UNIT'S SPECIFIC LIFT POINTS. FAILURE TO USE THE PROPER LIFT POINTS MAY RESULT IN UNIT DAMAGE AND/OR PERSONAL INJURY.

MOUNTING & RIGGING

This manual covers the rigging of evaporators that can be ceiling hung, floor mounted, or mounted on steel supports. Please refer to the applicable section below for mounting specific information.

CEILING HUNG APPLICATIONS

Confirm that there is a support rod firmly anchored in place for each 13/16 inch mounting hole on the unit. (The actual diameter of the rod is to be determined by accepted engineering methods up to a maximum diameter of 3/4 inch.) Carefully lift each unit into place and attach it to the support rods with nuts and washers as shown in the Appendix. All Mounting Holes Must be Used. Please ensure that unit is leveled using the unit hangers (the top of the evaporator cabinet is intentionally sloped to prevent moisture pooling). A secondary leveling measure is to ensure that the tube sheets are vertically leveled.

NOTES: For SSTME, SSTLE, SSTHE, SSTXE and SSTWE units, the top of the hanger channel or brackets must be level. Do not level by the top of the unit which is sloped for drainage. For SSTD units, the top of the unit must be level. For SSTW units, a 5 inch clearance is recommended between the top of the fan discharge and the ceiling (as indicated in the layout section).

For ceiling hung units only, legs and/or forklift channels may be removed following unit installation. Upon installation of unit, remove bolts securing hinged access panels. Bolts are for shipping purposes only.

FLOOR MOUNTED OR STRUCTURAL STEEL MOUNTED APPLICATIONS

Once each unit is in its desired position (on the floor or steel framework) all of the factory-supplied legs must be adequately supported. In addition, each leg must be adequately secured to the support structure.

Layout

- Proper equipment layout is essential to ensure effective air distribution within the cooled space. All SST-E evaporators require proper air circulation, therefore it is critical that adequate spacing around the unit be provided to achieve published performance. During the system design process, special attention should be given to space limitations, surrounding structures, existing units, piping and any potential future expansion plans.
- For standard ceiling hung evaporators with a vertical coil, and horizontal airflow, good practice is to allow the equivalent distance of the height of the unit between the back of the unit/air entry side, and any wall, structure, or other evaporator.
- For SSTD & SSTW units, it is recommended to allow a minimum of 5" clearance from the top of the unit to the ceiling/ overhead structure.

Storage

STORAGE REQUIREMENTS:

If the unit(s) will sit idle for an extended period of time prior to installation, it is recommended that the following maintenance be performed:

- The fan/motor bearings need to be turned by hand at least once per month. This can be accomplished by tagging and locking out the unit's disconnect, grasping the fan assembly, and rotating it several turns.
- Ensure the coil remains charged with nitrogen until the unit is installed/connected to the refrigeration system piping.
- If the unit sits longer than one month, insulation test the motor windings semi-annually
- Ensure units are level so the drain pan can gravity drain as it would in the field. Avoid standing water in the drain pan caused by storage on unleveled surfaces.
- Prior to rigging/installation open the fan panels to inspect the coil for debris, including dust, pollen, leaves or other loose impediments. If necessary, clean the coil with an EVAPCO accepted cleaner that can be found in "Cleaning Solutions and Sanitizers Keep Pace with Evaporator Coil Materials" that can be found on EVAPCO's website.
- Ensure all cleaner is rinsed thoroughly from coil prior to installation.

Piping

GENERAL PIPING GUIDELINES

All piping should be designed and installed by a qualified contractor to minimize vibration transmission, allow for thermal expansion, and be properly supported in accordance with recognized standards. All factory supplied piping on EVAPCO coil is ASME B31.5 compliant.

EVAPCO evaporators are furnished with multiple refrigerant connections, sealed at the factory and charged with nitrogen prior to shipment. The units should remain charged until ready to be connected to the refrigerant system piping. The piping that connects the evaporators to the rest of the refrigeration system has a direct effect on the efficiency of the units, and overall system performance.

Please refer to the latest edition of the IIAR Ammonia Refrigeration Piping Handbook for detailed instructions related to pipe sizing, connections, etc.

PLEASE NOTE: Any external piping or valves ARE NOT to be supported by the evaporator connections. Failure to properly support refrigerant piping or valves can result in damage to the evaporator, piping, and/or valves, and even result in catastrophic failure.

Drain Piping

- Drain piping should be kept as short as possible, be trapped properly and have a minimum pitch of ¼" per foot. For spaces with temperatures of 33F or lower, all drain piping and traps must be properly heat traced/heated and/or insulated.

Electrical Requirements

General Requirements for Field Wiring

All wiring must be installed in accordance with applicable electric codes to ensure safe operation. Before wiring the motors, confirm that the electrical supply is compatible with the motors and note the direction of fan rotation as indicated on the fan panel. Electrical overloads should be sized in accordance with the "DESIGN MOTOR AMPS". All electrical data for each unit is provided on the EVAPCO certified drawing. The "DESIGN MOTOR AMPS" shown on the EVAPCO certified drawing is per motor (not per unit) and takes into account motor service factor and air density correction at the design operating room air temperature shown. Refer to pages 5-6 of this bulletin for more information regarding the use of Variable Frequency Drives.

Fan Motor Wiring

All evaporator standard fan motors have sealed bearings with low-temperature grease and do not require periodic greasing. All 900, 1200, and 1800 rpm nominal fan motors are standard as Inverter Ready and are compatible for use on a VFD control. All 700 rpm nominal fan motors are Standard Duty rated and will require additional voltage conditioning at the VFD output for successful operation and lifespan. See the Variable Frequency Drives (VFD's) section on pages 5- 6 for important information regarding use of VFD's with all EVAPCO evaporators and fan motors.

Belt Driven Fan Units

- Fan belt tension must be checked before start-up and after the first 24 hours of service. After the break-in period, belt tension should be checked every month. To check belt tension, follow these steps:
- Using one finger, put moderate pressure on the drivebelt, half way between the two sheaves. The belt should deflect approximately 1/2 inch.
- If it deflects more or less than 1/2 inch, release the locking nuts/bolt on the motor base, then turn the adjustment bolt(s) on the motor base evenly so that the belt deflects approximately 1/2 inch when moderate pressure is applied as described in step 1.
- Check sheave alignment by placing a straight edge across both sheaves at the same time. There should be four points of contact between the sheaves and the straight edge. (See **FIGURE 1.**)

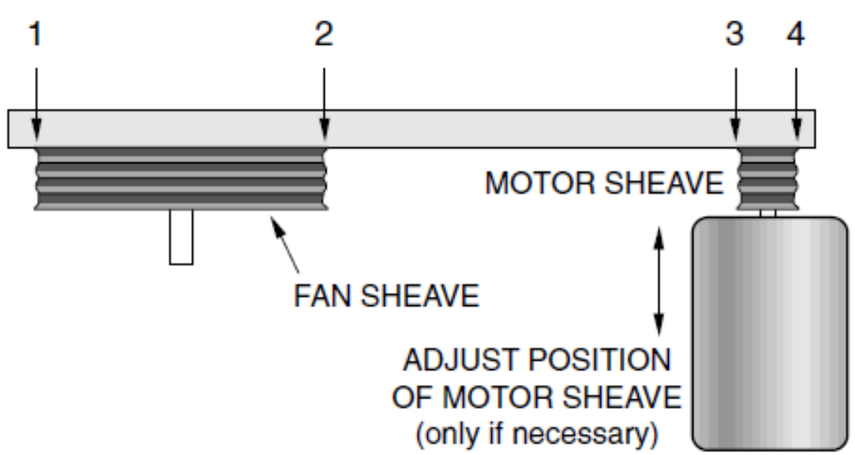

FIGURE 1

VFD Operation

VARIABLE FREQUENCY DRIVES (VFDS)

- EVAPCO evaporators are designed for industrial duty applications, which may be operated with standard motor starters or Variable Frequency Drives (VFDs). Variable Frequency Drives are electronic devices used for the purpose of controlling the speed of AC motors. The primary benefit of using VFDs compared to standard starters is the ability to adjust the speed of the motor to fit the constantly changing variables in the refrigeration system. VFDs allow the unit to be more efficient by matching the thermal capacity to the system load, thereby conserving energy.
- Refer to EVAPCO's Engineering Bulletin No. 44 available on EVAPCO's website www.evapco.com for more information regarding Variable Frequency Drive Applications.
- When using VFDs, refer to the VFD Manufacturer's recommended installation and start-up instructions before energizing the fans.
- Most VFDs are designed with "Skip" frequency settings which may be programmed as part of their commission procedure. The "Skip" frequency setting enables the VFD to skip over a particular frequency to eliminate mechanical harmonics. The "Skip" frequency is actually a frequency band and the number of "Skip" frequency bands may vary depending on the VFD Manufacturer's design.
- The VFD start-up procedure should always include a process to manually run through the drive's frequency increments slowly from 0 Hz to 60 Hz while taking note of any critical frequencies that result in fan vibration. This may be accomplished by careful observation, preferably with a vibration meter, if one is available. Once the frequencies that cause mechanical harmonics are identified, the start-up technician should program those "Skip" frequencies into the VFD to prevent operation at those frequencies and prevent potential damage to the evaporator.
- Each VFD Manufacturer may have different recommendations for identifying potential mechanical harmonics and setting the "Skip" frequencies in the drive program. Refer to the VFD Manufacturer's Installation, Operation and Maintenance Manual for additional recommendations for VFD start-up. Failure to follow these procedures may result in excessive vibration from mechanical harmonics at reduced fan speeds which can result in major equipment damage.

Recommended Practices for Evaporator Fan Motors Installed with VFDs

A VFD by its operating nature can produce high voltage spikes that are detrimental to the electric motor. Select a high quality VFD and follow industry recommended practices for VFD system design and installation. Improper installation of the VFD and electrical system can rapidly destroy the electric motor. Several important parameters are noted below when considering a VFD application. It is also recommended to consult the VFD manufacturer's guidelines for proper installation and configuration. Failure to follow these recommendations may void the standard warranty coverage of the motor(s).

VFD Switching (Carrier) Frequency Setting

This is the switching speed of the insulated gate bipolar transistors (IGBT's) in the VFD. Lowering the switching frequency of the VFD will reduce the number of times that peak voltages are present at the motor and minimize motor winding insulation stress and shaft/bearing currents. Lowering switching frequency may cause additional motor noise or whine. Adjust the VFD switching frequency to its lowest recommended setting (or the lowest recommended frequency of the load filter if employed) – as practical for motor noise level - generally 5 kHz or less.

Lead Length Between VFD and Electric Motor

Locate the VFD as close to the motor as possible or practical. The maximum recommended lead length is dependent on the selected motor(s), the selected VFD, control scheme, voltage and wire type. Longer lead lengths may require conditioning of the VFD output voltage with load reactors or filters as described below.

Wire Type / Wiring

- THHN, XHHN (low temperature) and VFD cable are typically used to connect the VFD to the motor. When using THHN or XHHN, observe lead length limits, always run conductors and ground wire in a metal conduit, and run only one set of VFD output leads per conduit. When using VFD cable, the maximum lead length is one-half (1/2) of the value shown in **TABLE A** metal conduit is preferred but plastic is acceptable, and while multiple VFD outputs can share a common conduit a separate conduit for each is preferred. Regardless of wire type, never run AC lines or signal wires in the same conduit as the VFD output voltage. Always de-burr conduit ends during installation to prevent damage to wiring when pulling through the conduit.
- For a VFD operating a single inverter ready motor or operating multiple inverter ready motors with a single wire run, the maximum recommended wire run (lead length) using THHN/XHHN wire is 100 feet or less at 460 volts. For a VFD operating multiple inverter ready motors with separate leads to each motor, the combined total of each wire run (lead length/motor) using THHN/XHHN wire should be 100 feet or less (i.e. – for a two fan unit with separate wire leads from the VFD to each motor, the maximum lead length per motor is 50 feet). These lead length recommendations do not apply to non-inverter ready motors (such as 690 rpm), see Load-Side Reactor Section below.

Load-Side Reactor

See also Wire Type / Wiring section above - adding a single load-side reactor at the VFD output (for single or multiple inverter ready motor protection) allows the lead length (THHN/XHHN wire) to be increased up to 500 feet for a single wire run at 460 volts (or a combined total of up to 500 feet in the case of multiple wire runs). A load-side reactor is a minimum requirement for VFD applications of any length wire run, 0 to 100 feet when using non-inverter ready motors (690 rpm motors).

NOTE: When using VFD cable, the recommended distances for wire lead length is one-half (1/2) the distance shown in **TABLE A.**

DV/DT Type Filter

See also Wire Type / Wiring section above - adding a single DV/DT type filter at the VFD output (for single or multiple inverter ready motor protection) allows the lead length (THHN/XHHN wire) to be increased up to 1000 feet for a single wire run at 460 volts (or a combined total of 1000 feet in the case of multiple wire runs). A DV/DT type filter is a minimum requirement for VFD applications of any length wire run, 0 to 500 feet when using non-inverter ready motors (690 rpm motors). NOTE: When using VFD cable, the recommended distances for wire lead length is one-half (1/2) the distance shown in **TABLE A**.

Sinus or Sine Wave Type Filter

See also Wire Type / Wiring section above – adding a single Sinus or Sine Wave type filter at the VFD output (for single or multiple inverter ready motor protection) allows the lead length (THHN/XHHN wire) to be increased up to 1000 feet or more for a single wire run at 460 volts (or a combined total of 1000 feet or more in the case of multiple wire runs). A Sinus or Sine Wave type filter is a minimum requirement for VFD applications of any length wire run, 0 to 1000 feet when using non-inverter ready motors (690 rpm motors). Typically, installing a VFD with wire runs of more than 1000 feet is not recommended. NOTE: When using VFD cable, the recommended distances for wire lead length is one-half (1/2) the distance shown in **TABLE A**.

Shaft Grounding Brushes or Rings

Brush kits or grounding rings are an optional accessory recommended on most motors that are located more than 100 feet from the VFD.

230 VOLT

Horsepower	Wire Lead Length*	Inverter Ready Motor	Non-Inverter Motor
0.1 – 50 HP	0 – 1000 ft.	--	Load-Side Reactor
0.1 – 50 HP	> 1000 ft.	DV/DT Filter	DV/DT Filter

460 VOLT

Horsepower	Wire Lead Length*	Inverter Ready Motor	Non-Inverter Motor
0.1 – 50 HP	0 – 1000 ft.	--	Load-Side Reactor
0.1 – 50 HP	100 – 500 ft.	Load-Side Reactor	DV/DT Filter
0.1 – 50 HP	500 – 1000 ft.	DV/DT Filter	Sinus Filter
0.1 – 50 HP	> 1000 ft.	Sinus Filter	Sinus Filter

575 VOLT

Horsepower	Wire Lead Length*	Inverter Ready Motor	Non-Inverter Motor
0.1 – 50 HP	< 50 ft.	Load-Side Reactor	DV/DT
0.1 – 50 HP	< 50 ft.	DV/DT	DV/DT

TABLE A – Recommended VFD Output Voltage Conditioning Device for Motor Lead Length

* Assumes THHN/XHHN type of wire – if using VFD cable, use one-half (1/2) the distance shown above in **TABLE A**. Length shown is for a VFD with a single wire run to a single motor or a single wire run to multiple motors. For a VFD with separate wire runs to multiple motors, divide distance shown above by number of motors controlled by the VFD for the maximum wire lead length per motor.

NOTE: A higher grade output voltage filter can always be used for a lower required duty. These devices provide inexpensive but highly effective protection of motors on any VFD application of any wire lead length. A conservative approach is recommended to maximize motor service life.

Startup & General Operation

- Startup Checklist
- Refrigeration/Cooling Operation
- Defrost Operation
- Maintenance

General Operation Procedure and Checks

PRE-OPERATION

- Inspect if unit is fastened at all hangers and if the unit is level
- Ensure that all fan and corresponding motor connections are fastened tight
    - Check fan rotation and electrical service
- Check that nameplate unit voltage is compatible with the supply voltage
    - Confirm that supply voltage is within 10% of the design value, as well as phase imbalance is within 2% of the design value for incoming panel and motor voltage. For specialty motor's please consult motor data or EVAPCO.
- Inspect all refrigerant connections - ensure that piping is complete and compliant with all applicable local and national standards
- Inspect all electrical connections for tightness and quality, ensure that wiring is compliant with all applicable local and national standards
- Open all service valves for liquid supply, hot gas supply, and suction are open and operational
- Check drain pan for proper drainage, as well as operation of any drain heaters / heat traced inner or outer pan

POST-OPERATION*

- Upon pull down, manual defrost may be required due to frost accumulation caused by high moisture content
- Following start-up, check the compressor for overload due to startup suction pressure levels
- Verify system charge and ensure equipment is operation within design limits
- Ensure proper airflow is produced by unit fans
- Check that control systems and thermostats are producing adequate values and are operating normally
- Observe system for vibration, pipe movement, water hammer and other abnormal noises/movements
- For liquid feed orifices, systems must have liquid refrigerant at a pressure above 5 psig and a temperature not exceeding approximately 9°F saturated suction temperature. Please consult EVAPCO or site engineer for varying system conditions outside of these bounds.

***NOTE:** If damage or a unit issue is observed following placement, please contact your EVAPCO equipment representative.

Maintenance

WARNING: Be sure to follow all facility safety precautions including Lock Out/ Tag Out procedures before performing any maintenance tasks.

WARNING: Before servicing or replacing parts ensure power to unit is turned off

Routine Maintenance

Listed below should be observed on a regular basis and written into the facility's equipment maintenance plan/schedule. The frequencies noted are minimum recommendations. The frequencies may be increased in accordance with each facility's standard of operation.

DURING OPERATION – WEEKLY

- Observe units for excessive vibration and listen to rotating parts for abnormal sounds.

DURING OPERATION – MONTHLY

- Visually inspect evaporator ensuring that fan guards are in place and are not obstructed.
- Visually inspect evaporator fan guards, fans and coil for dirt or debris buildup.
- Visually inspect evaporator for excessive ice buildup and witness defrost cycle. This includes on the fan guards, fan blades, coil surface and drain pan.
- Ensure that all drain lines are clear of debris to allow for proper draining.

DURING IDLE PERIODS – MONTHLY

- Where applicable, check and adjust fan belt tension.

DURING SHUTDOWN: WHILE NOT IN OPERATION – SEMIANNUALLY OR ANNUALLY

- Inspect cabinet and external parts including installed protective barriers, mounting bolts and supports for damage, warpage, cracks or looseness.
- Inspect evaporator and drain pan for dirt, debris or obstructions.
- Inspect evaporator fasteners and electrical wiring to ensure wiring and fasteners are intact.
- Inspect fans blades, hubs and motor bases for cracking.
- Manually spin fan(s), confirming no interference.

Cleaning

To assure optimum performance and maximum unit life, routine cleaning of the evaporator coil and drain pan is highly recommended. Cleaning frequency recommendations vary per application. A cleaning schedule should be written and followed according to the facility's operation and maintenance procedures.

Cleaning and sanitizing solutions (and their resulting vapors) which may come in contact with the evaporator should be non-corrosive and compatible with all materials of construction of the unit (e.g. galvanized steel, stainless steel, aluminum or copper). Reference the certified print for specific materials of construction for each evaporator

- If a high pressure washer is required to clean the evaporator, **the spray pressure must not exceed 1500 psig and the spray wand must be at least 12 inches away from the coil using a 25 degree or wider spray nozzle. In addition, the nozzle spray should be directed perpendicular to the coil face area.**
- Use of high-pressure water washers in a manner inconsistent of the above recommendations and the use of corrosive cleaning/ sanitizing chemicals may physically damage and corrode the unit, thereby, reducing the efficiency and life expectancy of the evaporator coil.

Refer to **TABLES B** and **C** for a current listing of acceptable cleaning solutions and sanitizers for different coil construction materials. This information is based on actual corrosion tests performed by EVAPCO.

The TABLE B Compatibilities are Based on the Following:

- Chemicals are applied within the concentration range recommended by the supplier.
- Daily exposure to the chemicals is limited to 30 minutes or less at a room temperature of 70°F or less.
- Water used has hardness of 50 ppm CaCO3 or greater.

STAINLESS STEEL / ALUMINUM COILS*	
Trade Name	**Manufacturer**
CL-122	NALCO
CL-127	NALCO
LMC-44	LW Chemical
SoilSolv	DuChem
FS Process Cleaner	Zep
Formula 940	Zep

*** Applies to Stainless Steel / Aluminum Coils Only**

HOT DIPPED GALVANIZED COILS	
Trade Name	**Manufacturer**
CL-127	NALCO
E+	Refrigeration Technologies
FS Process Cleaner	Zep
Formula 940	Zep
Formula 940	Zep

ALUMINUM / ALUMINUM COILS	
Trade Name	**Manufacturer**
CL-122	NALCO
CL-127	NALCO
LMC-44	LW Chemical
SoilSolv	DuChem
FS Process Cleaner	Zep
Formula 940	Zep

COPPER / ALUMINUM COILS	
Trade Name	**Manufacturer**
CL-122	NALCO
CL-127	NALCO
LMC-44	LW Chemical
SoilSolv	DuChem
FS Process Cleaner	Zep
Formula 940	Zep

TABLE B – Acceptable Cleaning Solutions

STAINLESS STEEL / ALUMINUM COILS*	
Trade Name	**Manufacturer**
Coil CLear one	NALCO
DQS	DuChem
Amine A	ZEP
Amine Z	Zep
FS Process Cleaner	Zep

*** Applies to Stainless Steel / Aluminum Coils Only**

HOT DIPPED GALVANIZED COILS	
Trade Name	**Manufacturer**
Coil CLear one	NALCO
DQS	DuChem
Amine A	ZEP
Amine Z	Zep
FS Process Cleaner	Zep

ALUMINUM / ALUMINUM COILS	
Trade Name	**Manufacturer**
Coil CLear one	NALCO
DQS	DuChem
Amine A	ZEP
Amine Z	Zep
FS Process Cleaner	Zep

COPPER / ALUMINUM COILS	
Trade Name	**Manufacturer**
Coil CLear one	NALCO
DQS	DuChem
Amine A	ZEP
Amine Z	Zep
FS Process Cleaner	Zep

TABLE C – Acceptable Sanitizing Solutions

For routine cleaning of stainless steel tube/aluminum fin, stainless steel tube/stainless steel fin, aluminum tube/aluminum fin and copper tube/aluminum fin coils, consider the COIL-FLO® program from Nalco Company (or equivalent coil cleaning system). For example, the Nalco program consists of a pH balanced cleaner (CL 127) for use on all coil surfaces including aluminum fins, an HP 500 feeder, and Coil Clear One®, an EPA-registered microbicide. For more information on COIL-FLO®, contact your local Nalco Sales/Service office.

Troubleshooting

PROBLEM	POSSIBLE CAUSE	REMEDY
Fan Motor Not Operational *Components effected:* *Fan/fan motor*	Faulty Motor, Bad Fuse, Unit in Defrost	Check for overload/short conditions or replace faulty motor; check/ replace fuse(s); wait for defrost cycle to complete
Unit not maintaining Room Temp *Components effected:* *T-stat/refrigerant/txv or superheat controller/coil or fins*	T-stat set to high; low refrigerant charge; superheat setting too high (DX); evaporators undersized for room load; coil iced/airflow blockage	Adjust T-stat; check charge/add refrigerant; adjust TXV; Units operating outside of certified design conditions; whether ice or debris ensure that path of air travel through coil is unrestricted
Insufficient Air Throw *Components effected:* *Coil/fans/motor*	Coil Iced/Obstructed; unit clearance insufficient, fans not operating properly	Defrost coil/clean debris or obstruction; refer to EVAPCO layout manual for recommended clearances; check/repair/replace fans or motor
Ice Accumulation On Ceiling *Components effected:* *Defrost timer/fan delay*	Defrost duration too long; too many defrosts; defective timer or valve; fans running in defrost; fan delay improperly set	Adjust defrost setting; decrease defrost frequency; repair/replace defective components; adjust defrost delay duration setting
Coil not Clearing of Frost *Components effected:* *HG coil & Pan/Defrost timer or relay/fans*	Insufficient defrost cycles; defrost cycle too short; HG volume insufficient; HG Temp/Pressure too low; defective timer/relay; fans running in defrost; excessive infiltration	Increase defrost frequency; adjust defrost setting for increased duration, increase HG flow to evaporator; increase HG Temp/Pressure; replace timer or valve; adjust setting to prevent fans running; locate and prevent infiltration
Uneven/Irregular Coil Frost Pattern *Components effected:* *Heaters/TXV/fans*	Defective heater elements; unit located too close to a door/opening; refrigerant feed insufficient; defrost duration too short; TXV too small; Fans not functioning properly; Unit installed unlevel resulting in liquid maldistribution	Replace elements; relocate evaporator; check & clean strainers/adjust HEV/ TXV settings; adjust defrost settings; Replace with proper TXV; check fans & motors for proper operation and repair/replace as needed
Ice Accumulation in Drain Pan *Components effected:*	Defective heater elements; units incorrectly pitched; condenser drain line clogged; defective drain line heater; insufficient HG to unit; defective defrost timer/t-stat/defrost relief regulating valve	Replace element; check & adjust unit pitch; repair/replace drain line/drain line heater; increase HG to unit; repair/ replace defective instrumentation after inspection

Appendix

RIGGING AND LIFTING APPENDICES

Appendix
This appendix shows details for lifting and mounting that are specific to each unit. Please refer to the proper section(s) for specific unit details.

LIFTING REQUIREMENTS – **SSTDE MODELS**

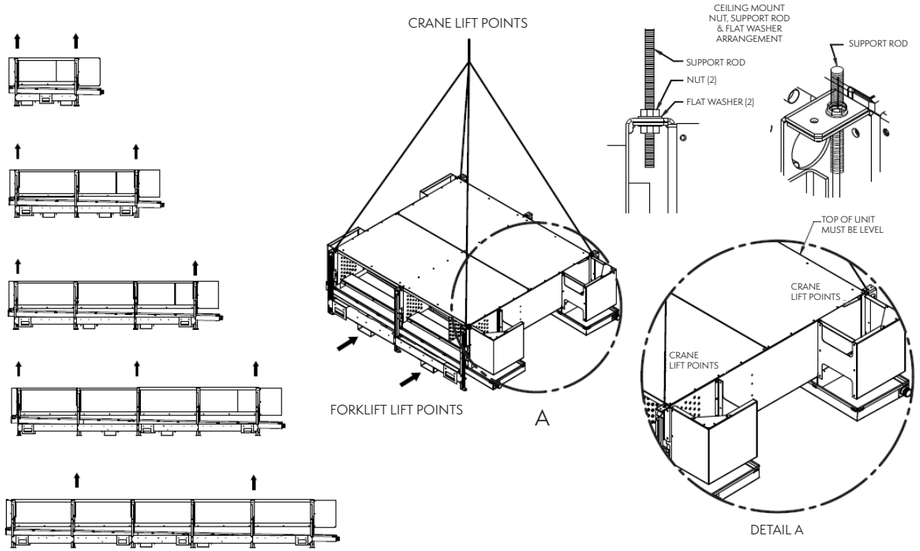

LIFTING REQUIREMENTS – **SSTLE & SSTHE MODELS**

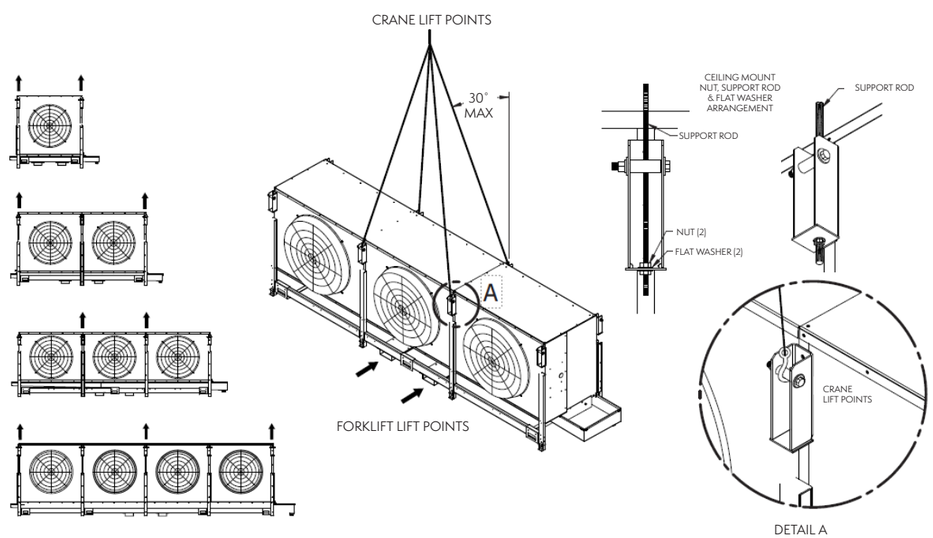

LIFTING REQUIREMENTS – **SSTME & SSTXE MODELS**

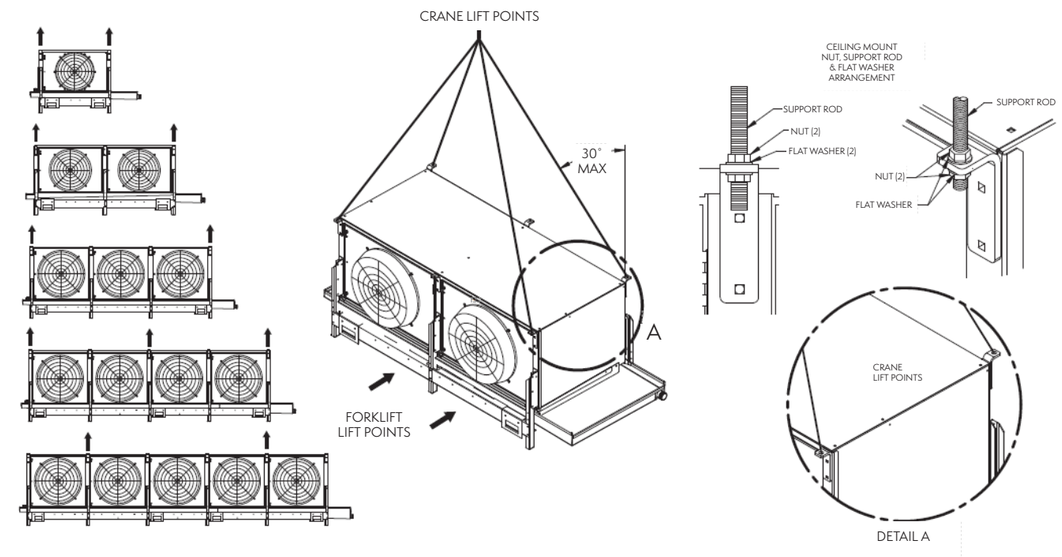

LIFTING REQUIREMENTS – **SSTDE MODELS**

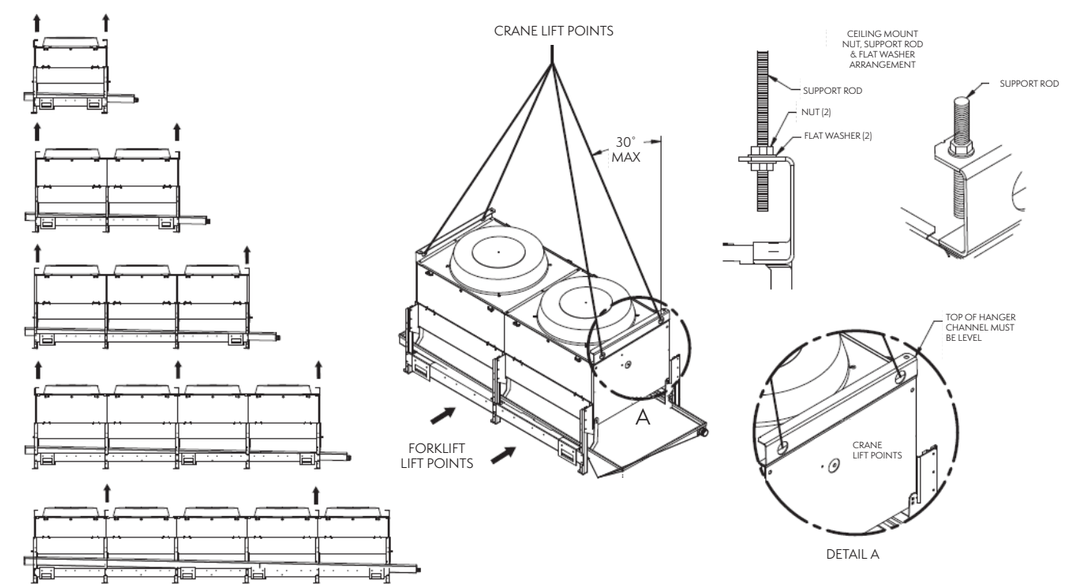

FOR EVAPCO AUTHORIZED PARTS AND SERVICE, CONTACT YOUR LOCAL EVAPCO SALES REPRESENTATIVE OR LOCAL SERVICE CENTER

EVAPCO, Inc. — World Headquarters & Research / Development Center

P.O. Box 1300 • Westminster, MD 21158 USA
410.756.2600 • marketing@evapco.com • **evapco.com**

North America

EVAPCO, Inc.
World Headquarters
Westminster, MD USA
410.756.2600
marketing@evapco.com

EVAPCO East
Taneytown, MD USA

EVAPCO East
Key Building
Taneytown, MD USA

EVAPCO Midwest
Greenup, IL USA
217.923.3431
evapcomw@evapcomw.com

Evapcold Manufacturing
Greenup, IL USA

EVAPCO West
Madera, CA USA
559.673.2207
contact@evapcowest.com

EVAPCO Alcoil, Inc.
York, PA USA
717.347.7500
info@evapco-alcoil.com

EVAPCO Iowa
Lake View, IA USA

EVAPCO Iowa
Sales & Engineering
Medford, MN USA
507.446.8005
evapcomn@evapcomn.com

EVAPCO LMP ULC
Laval, Quebec, Canada
450.629.9864
info@evapcolmp.ca

EVAPCO Select Technologies, Inc.
Belmont, MI USA
844.785.9506
emarketing@evapcoselect.com

Refrigeration Vessels & Systems Corporation
Bryan, TX USA
979.778.0095
rvs@rvscorp.com

Tower Components, Inc..
Ramseur, NC USA
336.824.2102
mail@towercomponentsinc.com

EvapTech, Inc.
Edwardsville, KS USA
913.322.5165
marketing@evaptech.com

EVAPCO Dry Cooling, Inc.
Bridgewater, NJ USA
908.379.2665
info@evapcodc.com

EVAPCO Dry Cooling, Inc.
Littleton, CO USA
908.895.3236
info@evapcodc.com

EVAPCO Power México S. de R.L. de C.V.
Mexico City, Mexico
(52) 55.8421.9260
info@evapcodc.com

Asia Pacific

EVAPCO Asia Pacific Headquarters
Baoshan Industrial Zone Shanghai, P.R. China
(86) 21.6687.7786
marketing@evapcochina.com

EVAPCO (Shanghai) Refrigeration Equipment Co., Ltd.
Baoshan Industrial Zone, Shanghai, P.R. China

EVAPCO (Beijing) Refrigeration Equipment Co., Ltd.
Huairou District, Beijing, P.R. China
(86) 10.6166.7238
marketing@evapcochina.com

EVAPCO Air Cooling Systems (Jiaxing) Company, Ltd.
Jiaxing, Zhejiang,P.R. China
(86) 573.8311.9379
info@evapcochina.com

EVAPCO Australia (Pty.) Ltd.
Riverstone, NSW, Australia
(61) 02.9627.3322
sales@evapco.com.au

EvapTech (Shanghai) Cooling Tower Co., Ltd
Baoshan District, Shanghai, P.R. China.
Tel: (86) 21.6478.0265

EvapTech Asia Pacific Sdn. Bhd.
Puchong, Selangor, Malaysia
(60) 3.8070.7255
marketing-ap@evaptech.com

Europe | Middle East | Africa

EVAPCO Europe
EMENA Headquarters
Tongeren, Belgium
(32) 12.39.50.29
evapco.europe@evapco.be

EVAPCO Europe BV
Tongeren, Belgium

EVAPCO Europe, S.r.l.
Milan, Italy
(39) 02.939.9041
evapcoeurope@evapco.it

EVAPCO Europe, S.r.l.
Sondrio, Italy

EVAPCO Europe A/S
Aabybro, Denmark
(45) 9824.4999
info@evapco.dk

EVAPCO Europe GmbH
Meerbusch, Germany
(49) 2159.69560
info@evapco.de

EVAPCO Middle East DMCC
Dubai, United Arab Emirates
(971) 56.991.6584
info@evapco.ae

Evap Egypt Engineering Industries Co.
A licensed manufacturer of EVAPCO, Inc.
Nasr City, Cairo, Egypt
(20) 10.054.32.198
evapco@tiba-group.com

EVAPCO S.A. (Pty.) Ltd.
A licensed manufacturer of EVAPCO, Inc.
Isando, South Africa
(27) 11.392.6630
evapco@evapco.co.za

South America

EVAPCO Brasil
Equipamentos Industriais Ltda.
Indaiatuba, São Paulo, Brazil
(55) 11.5681.2000
vendas@evapco.com.br

FanTR Technology Resources
Itu, São Paulo, Brazil
(55) 11.4025.1670
fantr@fantr.com

RECYCLED
Paper made from recycled material
FSC® C115175

EVAPCO, Inc. • P.O. Box 1300 • Westminster, MD 21158 USA
410.756.2600 • marketing@evapco.com • evapco.com

©2024 EVAPCO, Inc.

Printed on recycled paper using soy-based ink

Bulletin EVAP24OM